JK-2284系列

产品使用说明书&产品零件图册

Manual book & parts book

JACK 杰克

重要安全事项

此缝纫机在有的国家（设置场所）由于该国的安全规定而被机智的使用。
同时，在技术服务也同样被禁止。

1. 使用此缝纫机时，必须遵守包括如下项目的基本安全措施。
2. 使用此缝纫机之前，请阅读本使用说明书在内的所有指示文件。
3. 此缝纫机应与贵国的有关安全规定一起使用。
4. 使用此缝纫机和缝纫机动作中，所有的安全装置应安装到规定的位置。
   没有安装规定的安全装置的缝纫机禁止使用。
5. 此缝纫机应由接受过培训的操作人员来操作。
6. 使用缝纫机时，建议戴安全防护眼镜。
7. 发生下列情况时，应立即关掉电源开关，或拔下电源线插头。
   7-1机针、弯针、分离器等穿线和更换旋梭时。
   7-2更换机针、压脚、针板、弯针、分离器、送布牙、护针器、支架、布导向器等时。
   7-3修理时。
   7-4工作场所无人了或离开工作场所时。
   7-5使用离合马达时，请等待马达完全停止之后再进行。
8. 缝纫机以及附属装置使用的机油、润滑脂等液体流入眼睛或沾到皮肤上时，或被误饮时，应立即清洗有关部分并去医院治疗。

9. 禁止用手触摸打开了缝纫机开关通电的零件或装置。
10. 有关缝纫机的修理、改造、调整应由受过专门训练技术人员或专家来进行。
11. 一般的维修保养由受过训练的人员来进行。
12. 有关缝纫机的电气方面的修理、维修应由有资格的电器技术人员或专家的监督和指导下进行。
13. 修理、保养有关空气、气缸等压缩空气时，应切断空气压缩机供气源后再进行。
    如有残留压缩空气时，应放掉压缩空气。
    但，受过相当训练的技术人员或专家进行有关调整或确认动作时除外。
14. 缝纫机的使用其间应定期清扫。

15. 为了正常安全运转，应安装地线。同时应在不受高频焊接机等强噪音源影音的环境下使用。
16. 电源插头应用具有电器专门知识的人来安装。电源插头必须连接到接地插座上。

17. 缝纫机指定用途以外不能使用。
18. 对缝纫机的改造、变更应符合安全规格，并采取有效的安全措施。
    另外，对于有关改造和变更，公司概不负责。

19. 本使用说明书上采用以下2个警告符号。

有损伤操作人员、维修人员的危险。

安全上需要特别加以注意的事项。

IMPORTANT SAFETY INSTRUCTIONS

Putting sewing systems into operation is prohibited until it has been ascertained that the sewing systems in which these sewing machines will be built into,have conformed with the safety regulations in your country. Technical service for those sewing systems is also prohibited.

1.Observe the basic safety measures,including,but not limited to the following ones,whenever you use the machine.
2.Read all the instructions,including,but ont limited to this instruction Manual before you use the machine. In addition,keep this instruction Manual so that you may read it at anytime when necessay.
3.Use the machine after it has been ascertained that it conforms with safety rules/standards valid in your country.
4.All safety devices must be in position when the machine is ready for work or in operation. The operation without the specified safety devices is not allowed.
5.This machine shall be operated by appropriately-trained operators.
6.For your personal protection,we recommend that you wear safety glasses.
7.For the following,turn off the power switch or disconnect the power plug of the machine from the receptacle.
   7-1 For threading needle(s),looper,spreader etc.and replacing bobbin.
   7-2 For replacing part(s) of needle,presser foot,throat plate,looper,spreader,feed dog,needle guard,folder, cloth guide etc.
   7-3 For repair work.
   7-4 When leaving the working place or when the working place is unattended.
   7-5 When using clutch motors without applying brake,it has to be waited untill the motor stopped totally.
8.If you should allow oil,grease etc.used with the machine and devices to come in contact with your eyes or skin or swallow any of such liquid by mistake,immediately wash the contacted areas and consult a medical doctor.

9.Tampering with the live parts and devices,regardless of whether the machine is powered,is prohibited.
10. Repair,remodeling and adjustment works must only be done by appropriately trained technicians or specially skilled personnel.Only spare parts designated by OEM manufacture can be used for repairs.
11. General maintenance and inspection works have to be done by appropriately trained personnel.
12. Repair and maintenance works of electrical components shall be conducted by qualified electric technicians or under the audit and guidance of specially skilled personnel.
    Whenever you find a failure of any of electrial components,immediately stop the machine.
13. Before making repair and maintenance works on the machine equipped with pneumatic parts such as an air cylinder,the air compressor has to be detached from the machine and the compressed air supply has to be cut off.Existing residual air pressure after disconnecting the air compressor from the machine has to be expelled.Exceptions to this are only adjustments and performance checks done by appropriately trained technicians or specially skilled personnel.
14. Periodically clean the machine throghtout the period of use.

15.Grounding the machine is always necessary for the normal operation fo the machine.The machine has to be operated in an environment that is free from strong noise sources such as high-frequency welder.
16.An appropriate power plug has to be attached to the machine by electric technicians.Power plug has to be connected to a grounded receptacle.

17.The machine is only allowed to be used for the purpose intended.Other used are not allowed.
18.Remodel or modify the machine in accordance with the safety rules/standards while taking all the effective safety measures.The company assumes no responsibility for damage caused by remodeling or modification of the machine.

19.Warining hints are marked with the two shown symbols.

Danger of injury to operator or service staff

Items requiring special attention

目　录

运转缝纫机前的注意事项 1
1. 规格 2
2. 缝纫机的安装 5
3. 皮带防护罩的安装 5
4. 加油 6
5. 旋梭的油量调整 7
6. 机针的安装方法 7
7. 底线的卷饶方法 8
8. 梭心的安装方法 9
9. 上线的穿线方法 9
10. 线张力的调整方法 10
11. 针摆动幅度的调整 11
12. 压脚压力的调整 12
13. 压脚杆高度的调整 12
14. 压脚微量浮起调整 13
15. 送布长度的调整 13
16. 压缩针脚的调整 13
17. 送布牙的高度、倾斜度 14
18. 旋梭的安装与拆卸 14
19. 针杆高度的调整 15
20. 针和旋梭的同步以及针板的调整 15
21. 辅助挑线杆 16
22. 控制盘的安装 16
23. 踏板的调整 17
24. 固定刀 17
25. 机针停止位置的调整 17
26. 触键手动倒缝 18
27. 切线的调整 19
28. 上线拉出装置 20
29. 机针与旋梭的关系 20
30. 2288N花样凸轮的更换 21
31. 2285N的调整 22
32. 踏板倒缝装置（RF-1）（选购品） 23
33. 马达皮带轮和皮带 23
34. 缝制不良的原因和处理方法 26

2282 • 2282N-7 27
2280NU（-7）• 2286（-7）• 2288NU（-7） 35
2284（-7）• 2284NU（-7） 37
2284C-7 40

CONTENTS

CAUTION BEFORE OPERATION
1.SPECIFICATIONS....2
2.SETTING UP THE SEWING MACHINE....5
3.ATTACHING THE BELT COVER....5
4.LUBRICATION....6
5.ADJUSTING THE AMOUNT OF OIL IN THE HOOK....7
6.INSERTING THE NEEDLE....7
7.WINDING THE BOBBIN THREAD....8
8.INSERTING THE BOBBIN CASE AND THE BOBBIN....9
9.THREADING THE MACHINE HEAD....9
10.ADJUSTING THE THREAD TENSION....10
11.ADJUSTING THE ZIGZAG WIDTH....11
12.ADJUSTING THE PRESSURE OF THE PRESSER FOOT....12
13.ADJUSTING THE HEIGHT OF THE PRESSER BAR....12
14.ADJUSTING THE MICRO-LIFTING MECHANISM OF THE PRESSER FOOT....13
15.ADJUSTING THE STITCH LENGTH....13
16.ADJUSTING THE DENSER STITCHING....13
17.HEIGHT AND INCLINATION OF THE FEED DOG....14
18.ATTACHING/REMOVING THE HOOK....14
19.ADJUSTING HEIGHT OF THE NEEDLE BAR....15
20.ADJUSTING THE NEEDLE-TO-HOOK TIMING AND THE NEEDLE GUARD....15
21.AUXILIARY THREAD TAKE-UP LEVER....16
22.INSTALLING THE CONTROL PANEL....16
23.ADJUSTING THE PEDAL....17
24.HOW TO OPERATE THE PEDAL....17
25.ADJUSTING THE STOP POSITION OF THE NEEDLE....17
26.ONE-TOUCH TYPE REVERSE FEED SWITCH LEVER....18
27.ADJUSTING THE THREAD TRIMMER....19
28.NEEDLE THREAD FEEDING DEVICE....20
29.POSITION OF THE WIPER....20
30.REPLACING THE PATTERN CAM FOR 2288N....21
31.ADJUSTING 2285N MODEL OF SEWING MACHINE....22
32.PEDAL-OPERATED REVERSE FEED DEVICE(RF-1)
[separetely-available device]....23
33.MOTOR PULLEY AND BELT....23
34.TROUBLES AND CORRECTIVE MEASURES....25

2282N,2282N-7....27
2280NU(-7), 2286NU(-7), 2288NU(-7)....35
2284N(-7), 228NU(-7)....37
2284C-1....40

运转缝纫机前的注意事项

	1. 为了防止发生触电事故，请不要在打开电源的状态下，打开电气箱盖以及触摸电气箱内的零件。
	1. 为了防止人身事故的发生，请不要在卸下手指防护器等安全装置的状态运转缝纫机。 2. 为了防止卷入机器的人身事故，缝纫机运转中，请不要把手指、头发、衣服靠近飞轮，也不要把物品放到缝纫机上。 3. 为了防止人身事故的发生，打开电源时以及缝纫机运转中，请不要把手指放到机针的附近。 4. 为了防止人身事故的发生，缝纫机运转中请不要把手指放到挑线杆外罩内。 5. 缝纫机操作中，旋梭高速地旋转。为了防止手受到伤害，运转中请绝对不要把手靠近旋梭。。 6. 为了防止人身事故的发生，放倒缝纫机或返回原来位置时，要注意不要夹住手。 7. 为了防止突然的启动造成的事故，放倒缝纫机时或更换零件、调整等时请关掉电源。 8. 缝纫机停止时马达没有声音。为了突然的启动造成的事故，请注意不要忘记关掉电源。 9. 为了防止触电事故，卸下电源地线的状态，请不要运转缝纫机。 10. 为了防止触电和损坏电气零件，拔电源的插头时，请先关掉机器电源开关。

FOR SAFE OPERATUION

	1.To prevent accident caused by electric shock,never open the control box cover or touch the components inside the control box while the power switch is ON.
	1.To prevent accidents caused by electric shock,never open the control box cover or guard,eye guard or safety devices removed. 2.To avoid personal injuries,never bring your fingers,hair or clothes close to or place anything on the handwheel,V-belt or motor while the machine is running. 3.To avoid personal injuries,never bring your fingers under or near the needle when the power switch is turned ON or while the machine is running. 4.To avoid personal injuries,never bring your fingers into the needle bar cover while the machine is running. 5.To avoid personal injuries,be careful not to allow your fingers to be caught when tilting or re-setting of the machine is performed. 6.To prevent accidents caused by abrupt start of the sewing machine,turn OFF the power switch when the machine is tilted or the belt cover and the V-belt are removed. 7.The motor does not produce the noise while the machine is stopped.To prevent accidents caused by abrupt start of the sewing machine,be sure to turn OFF power switch when you stop the machine. 8.To prevent accidents caused by electric shock, do not operate the machine with the ground wire removed. 9.To prevent accidents caused by electric shock and damage of the electrical components,turn OFF the power switch in advance in case of inserting or removing the power plug.

CAUTION BEFORE OPERATION

WARNING:
To avoid malfunction and damage of the machine,confirm the following.

- Before you put the machine into operation for the first time after the set-up,clean it thoroughly.Remove all dust gathering during the transportation and oil it well.
- Confirm that the voltage has been correctly set.
  Confirm that the power plug has been properly connected to the power supply..
- Never use the machine in the state where the voltage type is different from the designated one..
- The sewing machine must rotate counterclockwise as viewed from the pulley.Take care not to allow the sewing machine to rotate in the reverse direction.
- Do not run the machine before filling the oil resevoir with the prescribed lubricating oil.
- Before starting a test run,remove the bobbin case and the needle thread from the machine.
- For the first month after the set-up,use the machine at a reduced sewing speed,2,800 rpm or less.
- Operate the handwheel after the sewing machine has totally stopped.
- Do not allow your fingers to come close to the face plate since the thread take-up knife is attached to the face plate.
- Do not open the thread take-up cover while the machine is operating.

运转缝纫机前的注意事项

为了防止机械的错误动作或者损伤，请确认如下项目：

- 最初使用缝纫机之前，请把机器打扫干净，清除运输途中积存的灰尘和污垢，并加油.
- 请确认电压设置是否正确，并确认电源插头是否正确连接.
- 电压规格不同时，请绝对不要使用.
- 缝纫机的运转方向，从皮带轮侧看应该为逆时针方向，请注意不要反转缝纫机.
- 机头部没有加油时，请绝对不要运转缝纫机.
- 试运转时，请把旋梭和上线卸下.
- 缝纫机开始使用的最初一个月，请降低缝纫速度，将缝纫速度控制到2, 800rpm以下.
- 待缝纫机确认停止之后再转动手轮.
- 面板上安装有切刀，请不要把手指放到附近.
- 缝纫机运转中，请不要打开调线杆防护罩.

1.SPECIFICATIONS

Model	2280N	2280N -7	2286N	2286N -7	2281N	2281N -7	2288N	2288N -7	2285N
Type of zigzag	Standard zigzag		3-step zigzag		Wide-width zigzag		Cam-replacement type zigzag		Fagoting
Stitch diagram							By means of pattern cam (Refer to P.8.)		
Sewing speed (Maximum) rpm	-3 5,500		-1 5,000		5,000		+2 5,000		4,000
Zigzag width (Maximum) mm	5		10(Standard 8 at the time of delivery)		A type 5 B type 8		8 (Depending on pattren cam. Refer to P.8.)		8(Standard 6 at the time of delivery)
Feed pitch(Maximum) mm	2.5		2		A type 2.5 B type 5		2 (By means of replacement of cam:2.5)		2.2
Needle	SCHMETZ 134SUK,438:#65 to #90,ORGAN DPX5:#9 to #14								SCHMETZ 438SUK #75 to #90
Oil used	New Defrix Oil No.1								
Noise	Workplace-related noise at sewing speed n=4,550/min:L_{PA} ≦84dB(A) Noise measurement according to DIN 45635-48-A-1.								

* 1.If you wish to set the zigzag width to a value larger than 8mm,the sewing speed is limited to 4,000 rpm.
* 2.For standard zigzag stitches and blind stitches of which zigzag width exceeds 5 mm,the sewing speed is limited to 4,200 rpm Set the sewing speed properly in accordance with the sewing products and process.
* 3.When the SC-800 is used,the sewing speed is limited to 5,000 rpm.

1. 规格

型 号	2280N	2280N -7	2286N	2286N -7	2281N	2281N -7	2288N	2288N -7	2285N
缝纫形式	标准曲折缝		4点曲折缝		宽幅曲折缝		更换凸轮式曲折缝		花性针迹
缝 迹 图							根据图案凸轮(参照P. 13)		
最高缝纫速度(rpm)	-3 5,500		-1 5,000		5,000		+2 5,000		4,000
最大摆幅宽度(mm)	5		10(出货时标准为8)		A 型为 5 B 型为 8		8(根据凸轮而不同)		8(出货时标准为6)
最大送布量(mm)	2.5		2		A 型为 2.5 B 型为 5		2(更换针板可以2.5)		2.2
使用机针	精密牌134SUK、438：#65 - #90. 风琴牌 DPx5：#9- #14								精密牌 438 SUK #65 - #90
使用机油	No. 1 新机油								

* 1. 摆动幅度超过8 mm以上时，速度为4,000 rpm.
* 2. 摆动幅度超过5 mm的2点曲折缝和钉标牌缝时的速度为4,200 rpm.
  请根据缝制物和工序适当的设定转速.
* 3. 使用SC-800时为5,000 rpm.

PTTERN CAM TABLE FOR 2288N AND 2288N-7

Name of pattern	Part No.	Description	Max.zigzag width	Max.pattren width	Number of stitches for pattern	Stitch pattern
Standard zigzag stitch	22568851	Needle rocking cam A	6.0	—	2	
3-step zigzag stitch	22568950	Needle rocking cam B	8.0	—	6	
2-step zigzag stitch	22569057	Needle rocking cam C	8.0	----	4	
Standard scallop	22569156	Needle rocking cam D	8.0	2.4	24	Left Right
Crescent scallop	22568255	Needle rocking cam E	8.0	3.6	24	Left Right
Equal-width scallop	22569354	Needle rocking cam F	8.0	3.4	24	Left Right
Equal-width scallop	22569453	Needle rocking cam G	8.0	2.4	12	Left Right
Blind stitch	22569552	Needle rocking cam H	6.0	----	4	Left Right
Blind stitch	22569651	Needle rocking cam J	6.0	----	6	Left Right
Blind stitch	22569750	Needle rocking cam K	6.0	----	8	Left Right
Blind stitch	22569859	Needle rocking cam L	6.0	----	12	Left Right

* The max. number of revolutions(number of stitches)is 4,200 s.p.m for standard zigzag stitches and blind stitches of which zigzag width exceeds 5 mm.

2288N，2288N-7花样凸轮一览表

花样名称	货 号	品 名	最大针摆幅度	最大花样宽度	图案针数	针迹图案
2点曲折	22568851	针摆动凸轮 A	6.0	-----	2	
4点曲折	22568950	针摆动凸轮 B	8.0	-----	6	
3点曲折	22569057	针摆动凸轮 C	8.0	-----	4	
标准荷叶边	22569156	针摆动凸轮 D	8.0	2.4	24	左 右
三日月荷叶边	22568255	针摆动凸轮 E	8.0	3.6	24	左 右
等宽荷叶边	22569354	针摆动凸轮 F	8.0	3.4	24	左 右
等宽荷叶边	22569453	针摆动凸轮 G	8.0	2.4	12	左 右
暗缝针迹	22569552	针摆动凸轮 H	6.0	-----	4	左 右
暗缝针迹	22569651	针摆动凸轮 J	6.0	-----	6	左 右
暗缝针迹	22569750	针摆动凸轮 K	6.0	-----	8	左 右
暗缝针迹	22569859	针摆动凸轮 L	6.0	-----	12	左 右

*（注意）摆动幅度超过5 mm的2点曲折缝和缝针迹时的最高转速为4,200 rpm.

2. SETTING UP THE SEWING MACHINE
缝纫机的安装

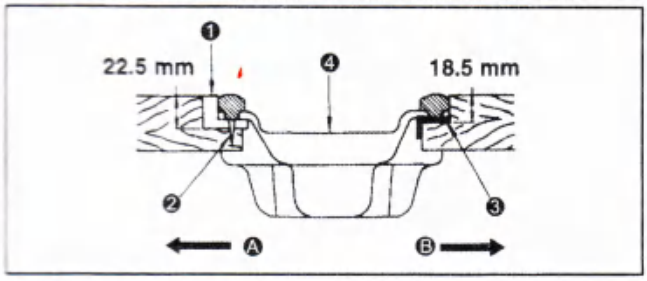

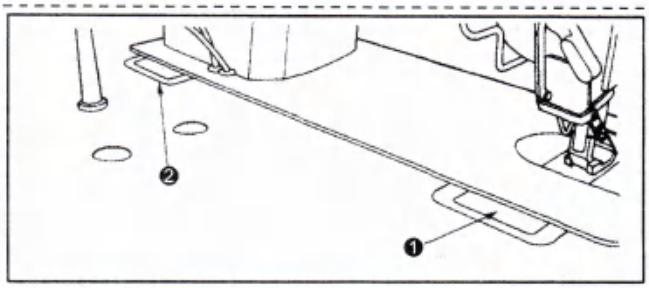

(1) Attaching the oil pan

Hammer the nails ❷ on the two support rubber seats ❶ of the machine head on operators' side Ⓐ of the protruding section of the table,and fix the two cushion seats ❸ of the machine head on hing side Ⓑ with rubber adhesive agent.Now,put the oil pan ❹ on the cushions.

(1) 油槽的安装

用螺钉❷把前侧❶的2个头部橡胶支座Ⓐ钉到机台的伸出部，用黏接剂黏接固定好铰链侧❸的2个头部胶垫座Ⓑ，然后把油槽❹放上去

(2) Attaching the hinge

Fit the hinge❶in the hole in the bed and engage it with the rubber hinge❷of the table.Put the machine head down on the cushions located at the four corners.

(2) 铰链的安装

把铰链❶放到机台的孔上，对准台台板橡胶支座❷，把头部放到四角的机头胶垫上.

3. ATTACHING THE BELT COVER
皮带防护罩的安装

WARNING:

To avoid possible personal injury due to abrupt start of the machine,turn off the power to the machine and check to be sure that the motor has totally stopped rotating in prior.

注意:

为了防止突然启动造成人身事故，请关掉电源，请确认马达确实停止转动后再进行。

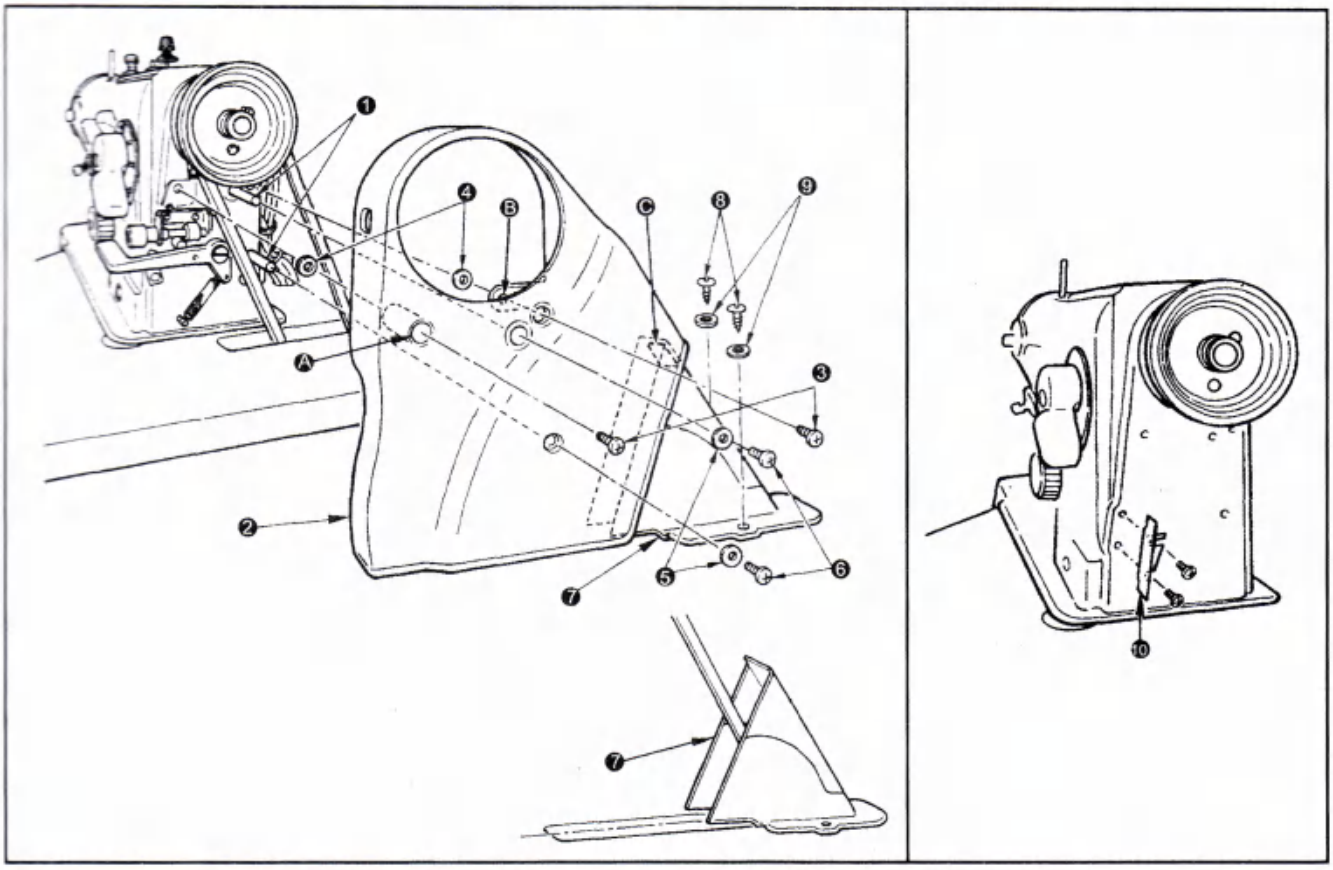

1) Securely attach two belt cover studs ❶ to the screw holes in the machine arm.
2) Put setscrews ❸ in hole Ⓐ of belt cover ❷ and section Ⓑ,and fix them with setscrew washers ❹.
3) Attach belt cover A ❷ to the machine arm from the slanted rear side so that it covers the belt.
4) Fix setscrews ❸ to the screw holes in the machine arm,and washers ❺ and setscrews ❻ to the belt cover supports.
5) Insert belt cover B asm. ❼ from the rear of belt cover A❷and fix it at the position where rubber section Ⓒ of belt cover B asm.❼ lightly comes in contact with the belt cover A.At this time,attach the belt cover B asm.at the position where the light and left sides are equal in terms of the long hole of the table with wood screw❽ and washer ❾.

In case of 2285N,attach belt cover A ❷ and belt cover B asm. ❼ after attaching belt cover C ❿ first.

1) 把皮带护罩的3根支柱 ❶ 牢牢地安装到机架的螺丝孔上.
2) 把固定螺丝 ❸ 插到皮带护罩A ❷ 的孔 Ⓐ 和 Ⓑ 部，然后用固定螺丝垫片 ❹ 固定.
3) 倾斜皮带护罩A ❷ ，从后方把皮带安装到机架上.
4) 把固定螺丝 ❸ 插到机臂的螺丝孔里，然后把垫片 ❺ 和固定螺丝 ❻ 固定到皮带护罩支柱.
5) 把皮带护罩B连接器 ❼ 从皮带护罩A ❷ 的后方插入，在皮带护罩B连接器 ❼ 的橡胶部 Ⓒ 轻轻顶住的位置固定好. 此时，把大螺丝 ❽ 垫片 ❾ 安装到机台长孔的左右均等的位置.

2285N时，首先安装皮带护罩C ❿，然后安装皮带护罩A ❷ 、B连接器 ❼.

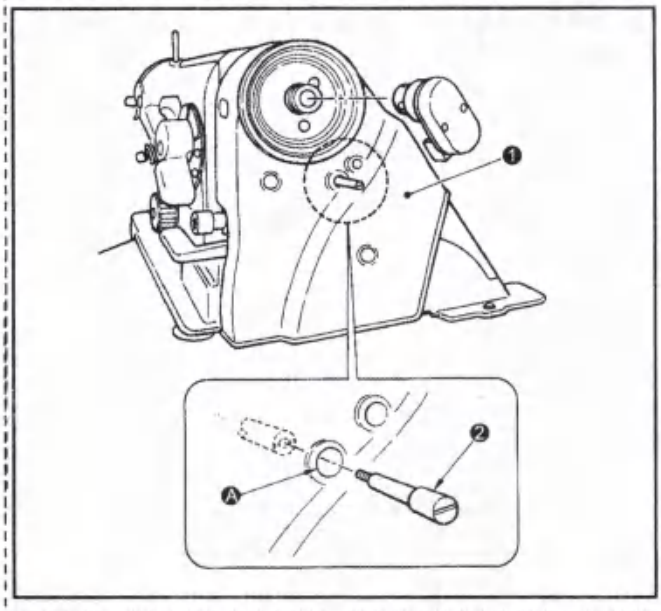

■ In case of using a market-available needle positioner!

使用市场出售机针的夹具

Adjust so that the needle always stops at the position higher than the cloth to make the sewing work very effective.
In this case the needle positioner can be used.
Attach the synchronizer of the needle positioner as shown in the figure on the left.
Fix tightly the synchronizer support ❶ (optional) into the screw hole of the belt cover stud instead of a screw.Loosen four setscrews in belt cover A ❶ and temporarily tighten them.
Remove the setscrew in hole Ⓐ among the four setscrews and fix synchronizer support ❷ to the belt cover stud.Then perform final tightening of the setscrews of the whole belt cover.

The synchronizer support ❶ is exclusively used for 2280N series.
Part No. is 22535462:Synchronizer support asm.
Specify this number in case of replacement.

机针如果一定在布的上方停止的话，缝纫效率就会大大提高．这时需要使用机针夹具．请把机针夹具如图所示安装起来．指示灯支架 ❶ （特别是定制品）请拧到皮带防护罩支柱的螺丝孔上固定起来．拧松皮带护罩A ❶ 的4个固定螺丝，临时固定．卸下4个固定螺丝中的 Ⓐ 孔的固定螺丝把信号灯支架 ❷ 固定到皮带护罩支柱上之后再正式地拧紧皮带护罩的所有固定螺丝．

指示灯支架 ❶ 是 2280N系列专用.货号为22535462，更换时请指定货号.

4.LUBRICATION
给油

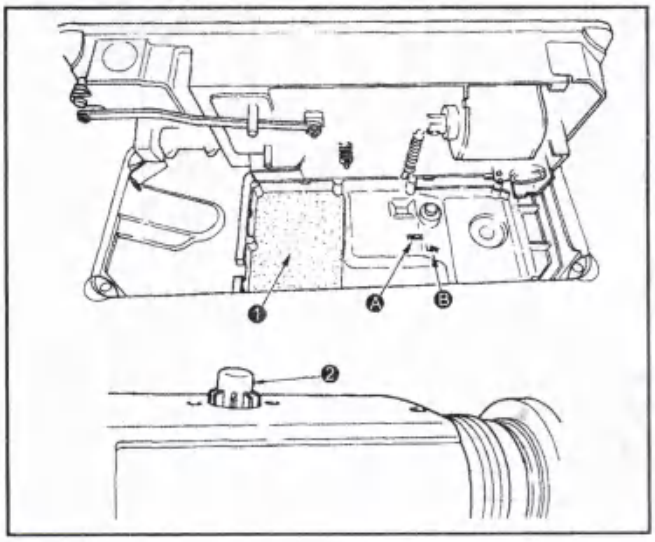

1) Fill the oil pan with New Defrix Oil No.15upto the level of "HIGH" mark Ⓐ.
2) Add the oil as soon as the oil level comes down to "LOW" mark Ⓑ or lower.
3) Run the sewing machine after the lubrication.As long as the machine is lubricated normally,the oil splash is seen through the oil sight window. ❷.
4) The amount of the oil splash has no connection with the oil amount in the oil pan.So,do not worry about the amount of the oil splash.
5) Put foamed polyurethane pad ❶ in the oil pan.When replacing the oil,squeeze the sponge and remove dust accumulated in the oil pan.

Before operating a newly installed machine or a machinewhich has not been used for a relatively long period oftime,let the machine run idle for approximately ten minutesat 3,000 to 3,500 rpm.

1) 把NO.15新机油加入到油槽，加到HIGH标记的 Ⓐ 位置.
2) 如果油面降到LOW标记 Ⓑ 以下时，请再次把油加满.
3) 加油后运转缝纫机，润滑正常时应能看到油窗 ❷ 里油面跳动.
4) 油的跳动量的大小跟油量的多少无关，因此不用担心.
5) 请把泡沫塑料 ❶ 放到油槽中.
更换缝纫机油时，请用手拧泡沫塑料除去积在里面的污垢.

使用新缝纫机或长期没有使用过的缝纫机时，请进行约10分钟3,000 – 3,500的空载运转.

5.ADJUSTING THE AMOUNT OF OIL IN THE HOOK
旋梭的油量调整

WARNING:
To avoid possible personal injury due to abrupt start of the machine,turn off the power to the machine and check to be sure that the motor has totally stopped rotating in prior.
注意:
为了防止突然启动造成人身事故，请关掉电源，请确认马达确实停止转动后再进行。

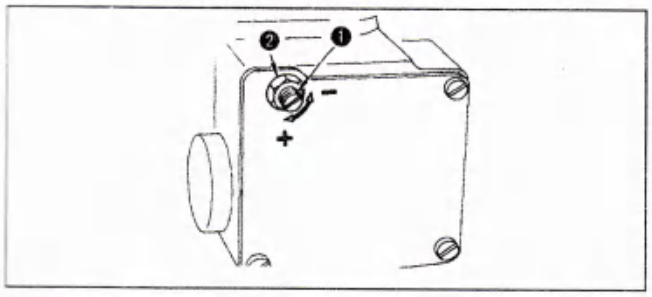

1) Tilt the machine head,and adjust the amount of oil in the hook by turning the adjusting screw ❶ mounted on the hook driving shaft gear box.Loosen the nut ❷ ,then turn the adjusting screw ❶ .
Turn the adjusting screw in the "+" direction (clockwise) to increase the amount of oil in the hook.
Turn the adjusting screw in the "-" direction (counterclockwise) to decrease it.
2) After the adjustment,fix the adjusting screw by tightening the nut ❷ .

* For 2284C-7,see p.44

After the adjustment,check the amount of oil in thehook after running the sewing machine at a speedof 3,000 to 3,500 rpm for approximately 10 minutes.

1) 向后倒放缝纫机，转动旋梭轴齿轮箱上的调整螺丝 ❶ 进行调整. 请拧松螺母 ❷ 后转动调整螺丝 ❶ .
向"+"的方向转动.....变多　　向"-"的方向转动.....变少
2) 请调整，请把螺母 ❷ 拧松固定.

*有关 2284C-7，请参照P44的说明.

请调整，用3,000 rpm – 3,500 rpm 的速度运转约10分钟，确认油量.

6.INSERTING THE NEEDLE/
机针的安装方法

WARNING:
To avoid possible personal injury due to abrupt start of the machine,turn off the power to the machine and check to be sure that the motor has totally stopped rotating in prior.
注意:
为了防止突然启动造成人身事故，请关掉电源，请确认马达确实停止转动后再进行。

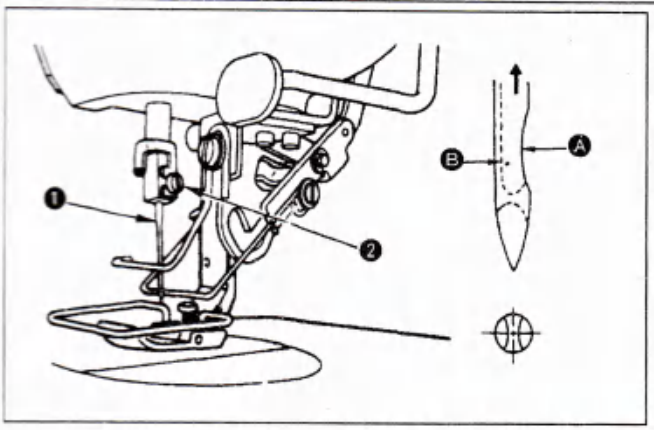

1) Turn the handwheel by hand to raise the needle bar to the hightest point.
2) Loosen the needle clamp screw ❷ .Hold the needle ❶ so that the long groove Ⓑ on the needle is facing exactly toward you.
3) Insert the needle deep into the hole of the needle bar in the direction of the arrow until it will go no further.
4) Securely tighten the screw ❷ .
5) Confirm that the long groove Ⓑ on the needle faces toward you.

1) 转动手轮，把针杆上升到最高位置.
2) 拧松机针固定螺丝 ❷，手拿机针让机针 ❶ 长满部 Ⓑ 朝向前方.
3) 沿箭头方向巴机针插到针杆孔的最深处.
4) 把机针固定螺丝 ❷ 拧紧
5) 确认机针的长满 Ⓑ 是否朝向前方.

7.WINDING THE BOBBIN THREAD
底线的卷绕办法

WARNING:
To avoid possible personal injury due to abrupt start of the machine,turn off the power to the machine and check to be sure that the motor has totally stopped rotating in prior.

注意：
为了防止突然启动造成人身事故，请关掉电源，请确认马达确实停止转动后再进行。

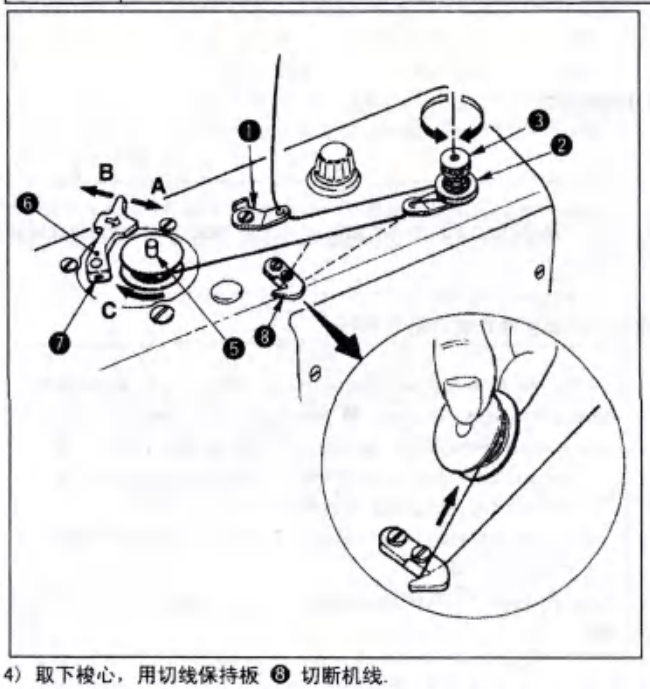

1) Insert the bobbin deep into the bobbin winder spindle ❺ until it will go on further.
2) Pass the bobbin thread pulled out from the spool rested on the right side of the thread stand following the order as shown in the figure on the left.Then,wind the end of bobbin thread on the bobbin several times.
3) Press the bobbin winder trip latch ❻ in the direction of A and start the sewing machine.The bobbin rotates in the direction of C and the bobbin thread is wound up.The bobbin winder spindle ❺ will automatically stop as soon as the winding is finished.
4) Remove the bobbin and cut the bobbin thread with the thread cut retainer ❽ .
5) To adjust the winding amount of the bobbin thread,loosen the setscrew ❼ and move the bobbin winder trip latch ❻ to the direction A and B.Then,tighten the setscrew ❼ .
   To the direction A: Decrease
   To the direction B: Increase

1) 把梭心推到卷线轴 ❺ 的最里面.
2) 把线架右侧的卷线如图所示穿线，并把线端在梭心上卷线几圈.
3) 把卷线拨杆 ❻ 推到A方向，转动缝纫机. 梭心向C方向转动，线被绕到心上. 卷线结束后卷线轴 ❺ 自动停止.
4) 取下梭心，用切线保持板 ❽ 切断机线.
5) 调整底线卷线量时，请拧松固定螺丝 ❼ ，把卷线拨杆 ❻ 移动到向A方向或B方向，然后拧紧固定螺丝 ❼ .

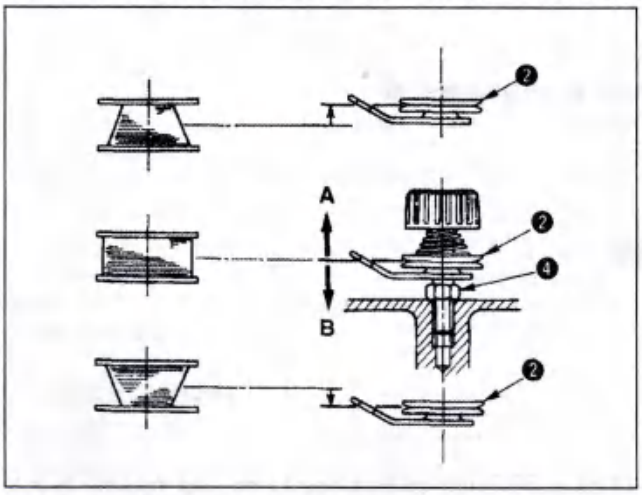

6) In case that the bobbin thread is not wound evenly on the bobbin, loosen the nut ❹ and turn the bobbin thread tension to adjust the height of the thread tension disk ❷.

- It is the standard that the center of the bobbin is as high as the as the center of the thread tension disk.
- Move the position of the thread tension disk ❷ to the direction A as show in the figure on the left when the winding amount of the lower part of the bobbin is excessive and to the direction B as shown in the figure on the left when the winding amount of the bobbin thread on the upper part of the bobbin is excessive.

After the adjustment,tighten the nut ❹.

6) 如果线不能平绕梭心时，拧松螺母 ❹ ，转动卷线张力器，调整线张力盘 ❷ 的高度.
   - 旋梭中心和线张力盘中心高度一样时为标准位置.
   - 下多卷时，如图的A方向，
     上多卷时，如图的B方向移动线张力盘 ❷ 的位置.

   调整后，把固定螺母 ❹ 拧紧.

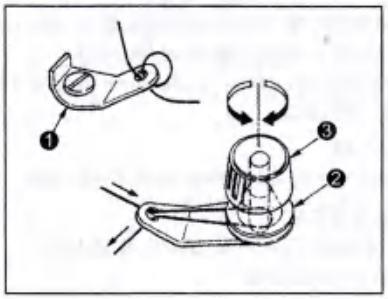

7) Turn the thread tension nut ❸ to adjust the tension of the bobbin thread winder.
8) In case of using the decorative thread of the bobbin thread,it is likely to be diffcult to wind the bobbin thread as the decorative thread comes off the thread tension disk ❷.In this case,this problem will be inproved by passing the bobbin thread two times through the thread tension guide ❶ or passing the bobbin thread once through the bobbin thread tension rod(asm.) and again passing the bobbin thread through the bobbin thread tension rod(asm.) after passing the bobbin thread through the thread tension disk ❷.

7) 调整底线卷线张力时，请转动线张力螺母 ❸ 进行调整.
8) 底线使用装饰线时，有可能从底线绕线的线张力盘 ❷ 脱线，卷线困难. 这时，把线往卷线线张力导向器 ❶ 上穿2次线，或往卷线张力杆（结合）上穿1次线，过线张力盘 ❷ ，再次穿过卷线张力杆（结合），来改善卷线.

8.THREADING THE MACHINE HEAD
梭心的安装方法

WARNING:
To avoid possible personal injury due to abrupt start of the machine,turn off the power to the machine and check to be sure that the motor has totally stopped rotating in prior.
注意:
为了防止突然启动造成人身事故，请关掉电源，请确认马达确实停止转动后再运行。

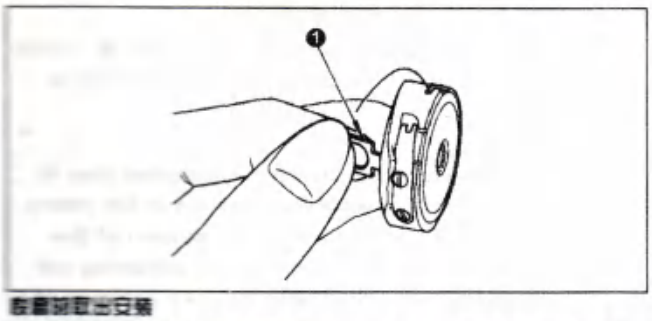

梭心的取出安装

1) 转动手轮，让机针到达最高位置. 2) 如图所示，搬起梭套的把手❶. 3) 从油槽的下方伸进手，插到旋梭轴上. 4) 确实的扣好梭套把手.

*** 取出时安装几时相反的顺序拉起梭套把手即可取出来.**

Inserting and removing the bobbin case

1) Turn the handwheel by hand to raise the needle to the highest point.
2) Raise the bobbin case latch ❶ and hold it between your two fingers as shown in the figure on the left.
3) Insert the bobbin case as it is being held into the sewing hook shaft as it will go by putting your hand from the under of the oil reservoir.
4) Release the bobbin case latch to let it steadily rest in the closing position.

*** Reverse the above procedures when removing the bobbin case.**

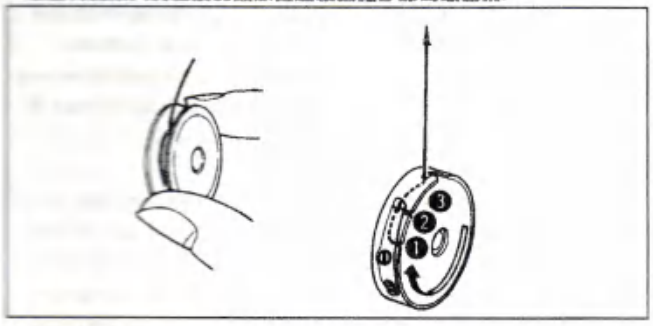

Placing a bobbin into bobbin case

1) Take a bobbin by your right hand with the thread drawn out about 5 cm and place it into the bobbin case as illustrated.
2) Thread the bobbin case in the order of the numbers and pull it out through the thread path as illustrated.
3) Make sure that the bobbin rotates in the bobbin case in the direction shown by arrow.

梭心的插入方法

1) 把梭心上的线头拉出5 cm左右，如图所示插入梭套.
2) 把线按槽沟的号码顺序穿过，把线从穿线口拉出.
3) 手拉底线，梭心如箭头方向旋转.

9.THREADING THE MACHINE HEAD
上线的穿线方法

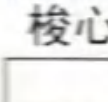

WARNING:
To avoid possible personal injury due to abrupt start of the machine,turn off the power to the machine and check to be sure that the motor has totally stopped rotating in prior.
注意:
为了防止突然启动造成人身事故，请关掉电源，请确认马达确实停止转动后再运行。

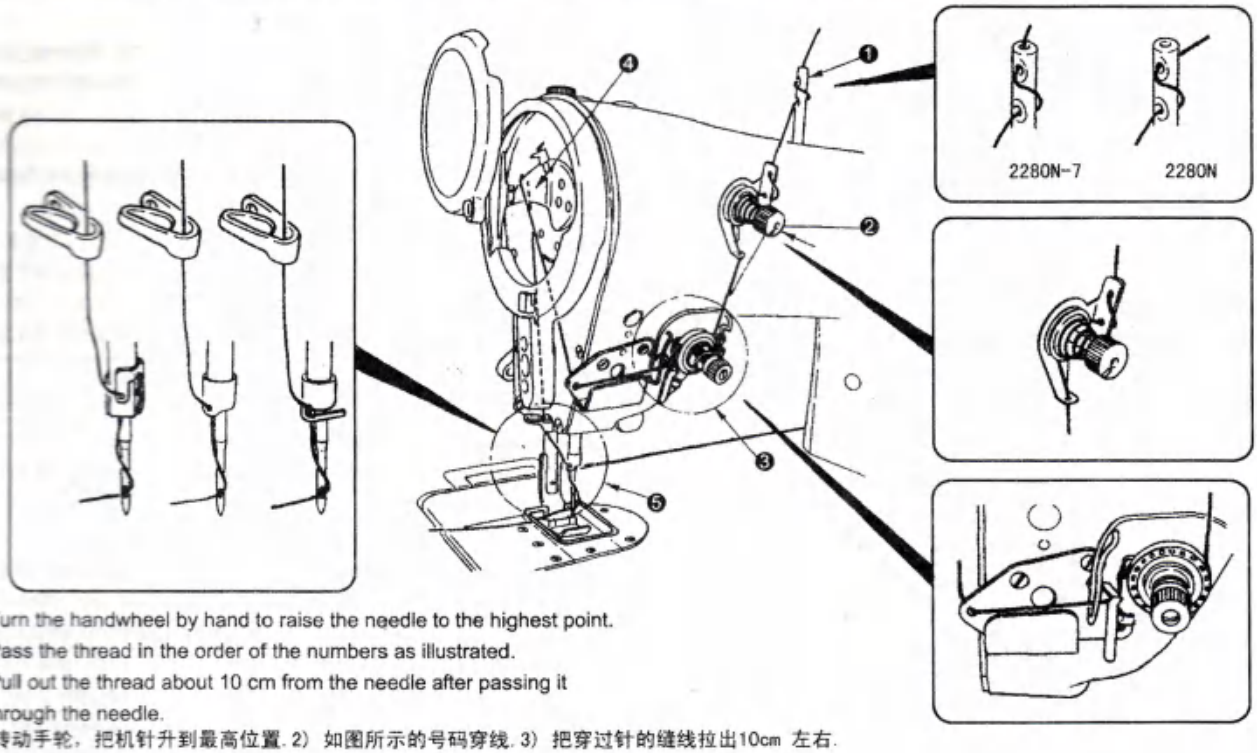

1) Turn the handwheel by hand to raise the needle to the highest point.
2) Pass the thread in the order of the numbers as illustrated.
3) Pull out the thread about 10 cm from the needle after passing it through the needle.

1) 转动手轮，把机针升到最高位置. 2) 如图所示的号码穿线. 3) 把穿过针的缝线拉出10cm 左右.

10.ADJUSTING THE THREAD TENSION
线张力的调整方法

WARNING:
In case of thread-breakage,it may occur that the thread tangles on the thread take-up lever,In this case remove the thread tangling around the thread take-up lever by raising the thread take-up cover.
At this time,be careful not to cut your fingers with the knife.
注意：发生断线时，有时拨线杆上会绕线. 这时，请打开挑线杆防护罩取下卷线的机线. 此时，请注意不要被刀切伤.

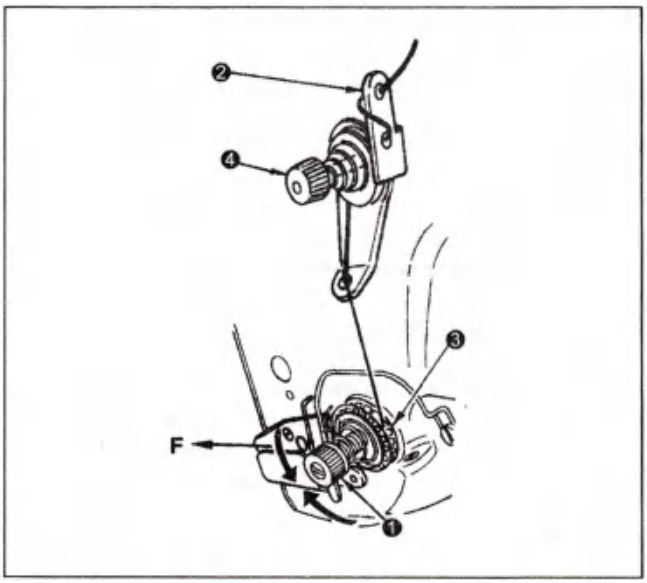

(1) Adjusting the needle thread tension

1) Adujust the needle thread tension using the tension nut ❶ .Turning the tension nut clockwise increases the needle thread tension,or counterclockwise decrease it.

1.If the thread tension of the pretension disc ❷ is too low,the thread may slip out of teh rotary tension ❸ .Adjust the thread tension of the pretension,using the pretension adjusting nut ❹ taking care of tension balance between the pretension and the rotary tension.

2.After adjusting the needle thread tension,draw the thread in the direction F to check that the rotary tension ❸ smoothly rotates with no thread slippage. If the thread slips out of rotary tension,tighten the pretension adjusting nut ❹ .

(1) 上线张力的调整

1) 上线张力用线张力螺母 ❶ 调整.
向右转动..... 变强　　向左转动..... 变弱

1) 线张力器 ❷ 过紧的话，转盘张力 ❸ 变小有时线会打滑.请注意张力的适度，用张力调整螺母 ❹ 进行调整.
2) 设定了上线张力之后，把线向F方向拉出，确认张力器 ❸ 不打滑线可以顺利转动.如果滑出时，请拧紧张力调整螺母 ❹ .

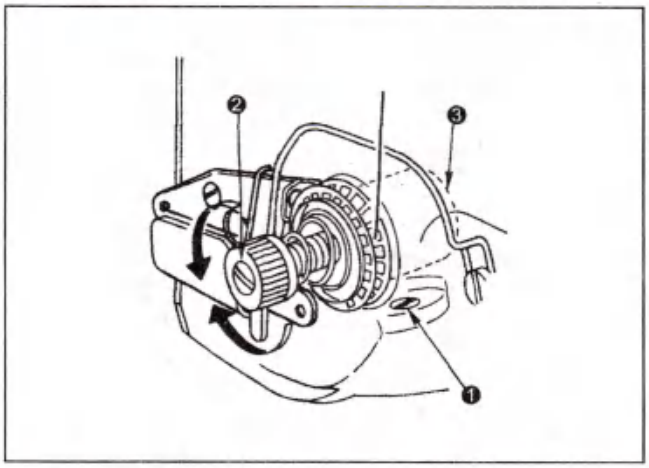

(2) Adjusting the thread take-up spring

1) To change the tension of the thread take-up spring,firmly tighten the screw ❶ which fastens the tension post socket to the machine arm and insert the blade of a screwdriver into the slot in the tension post ❷ to adjust the tension of the thread take-up spring.
Turn it clockwise to increase.
Turn it counterclockwise to decrease.

2) To change the amount of thread taken by the thread take-up spring ,loosen the clamping screw ❶ of the tension post socket and turn tension post socket ❸ .

Adjustable range of the amount of thread taken by the thread take-up spring.....6 to 10 mm

(2) 挑线弹簧的调整

1) 改变挑线弹簧的强度时，请把线张力棒固定螺丝 ❶ 拧紧，把螺丝刀插入线张力杆 ❷ 的沟槽进行调整.
向右转动..... 变强　　向左转动..... 变弱

2) 改变挑线弹簧的挑线量时，请拧松线张力杆固定螺丝 ❶ ，转动线张力杆座 ❸ . 挑线量范围.....6 - 10 mm

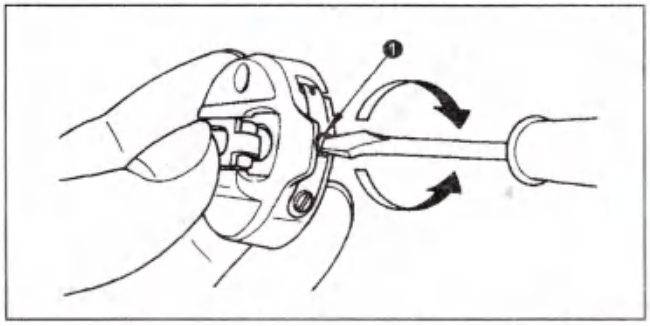

(3) Adjusting the bobbin thread tension

1) The tension of the bobbin thread is adjusted by turning the tension adjusting screw ❶ .
Turn it clockwise to increase.
Turn it counterclockwise to decrease.

(3) 底线张力的调整

1) 底线张力请转动梭套的线张力螺丝 ❶ 进行调整.
向右转动..... 变强
向左转动..... 变弱

11.ADJUSTING THE ZIGZAG WIDTH
针摆动幅度的调整

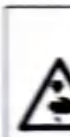

WARNING:
To avoid possible personal injury due to abrupt start of the machine,turn off the power to the machine and check to be sure that the motor has totally stopped rotating in prior.

注意:
为了防止突然启动造成人身事故，请关掉电源，请确认马达确实停止转动后再进行。

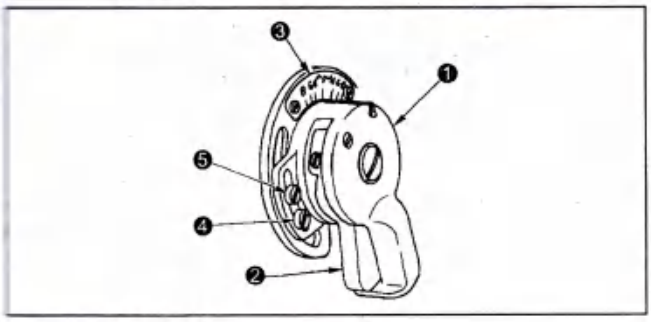

(1) Adjusting the zigzag width

The zigzag width is adjusted by the knob ❶

1) Push the lever ❷ with your finger.
2) Turn the knob as you are pushing the lever and set the pointing line to a desired zigzag width which is indicated by the zigzag width scale ❸ in mm.
3) Release the lever,and the knob will be locked up in the given position.

*** For the 2281NA (narrow width type), the max. zigzag width has been factory-limited to 5 mm and for the 2281NB(wide width type) to 8 mm.**
However, 2281NA can be converted to 2281NB and 2281NB to 2281NA by replacing following parts and clanging the position of the stopper(changing the zigzag width and the position of the needel).

	A type	B type
Presser foot	22548663	22580369
Throat plate	22548010	22581409
Feed dog	22548119	22540009

When replacing the gauges,adjust the zigzag width and the feeding amount in accordance will the shape of the gauge.

(1) 摆动幅度的调整

摆动幅度用摆动幅度旋钮 ❶ 来进行调整.

1) 用手按旋钮柄 ❷ .
2) 按住旋钮柄的状态下转动旋钮，把指示线对准刻度板 ❸ 的数字(mm).
3) 手松开旋钮柄，即被固定到其刻度位置.

* 2281NA(窄型机)出厂时，最大摆动幅度固定为5mm，2281NB（宽型机）规定为8mm.但是，更换成以下零件和变更止动器位置(变更针摆动幅度和针位置)之后，2281NA可以改造为B型机，同样也可以把2281NB型机*单地改造A型机.

改成其他派生机种时，请根据图案的形状调整摆动幅度和送布景.

	A 规格	B 规格
压 脚	22548663	22580369
针 板	22548010	22581409
送布牙	22548119	22540009

*** For the 2286N model of sewing machine,the zigzag width has been factory-set to 8 mm.However,the zigzag width can be adjusted up to the maximum of 10 mm by replacing the presser foot,throat plate and feed dog and changing the position of the stopper,In this case,adjust the height of the needle bar so that the blade point of the hook passes the upper end of the needle eyelet when the needle throws to the leftmost end of its zigzag stroke,If the zigzag width is set to 10 mm,run the machine at the speed of 4,000 rpm or less.**

Presser foot	22580369
Throat plate	10041010
Feed dog	10047017

* 2286N出厂时摆动幅东规定为8mm，但是更换下列的压脚、针板、送布齿以及变更止动器的位置，最大可以调整到10mm.左摆时，调整针杆高度，让旋梭尖穿过孔上端.但是，调整到10mm，转速到10mm后，转速控制在4,000rpm以下.

压 脚	22580369
针 板	10041010
送布牙	10047017

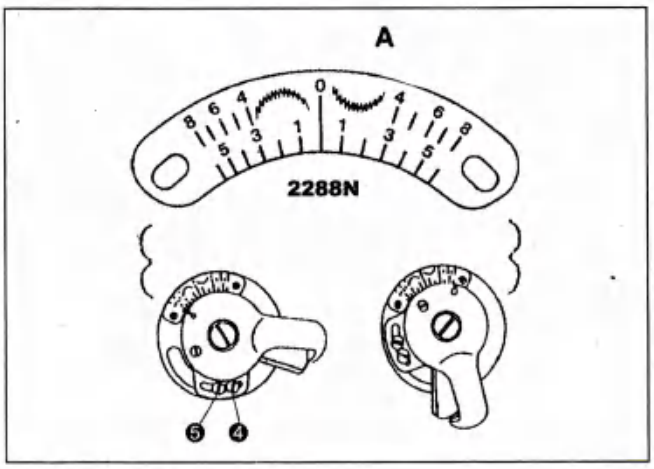

A side is normally used

* For the 2285N model of sewing machine,the zigzag width has been factory-limited to 6 mm.
However,the zigzag width can be adjusted up to the maximum of 8 mm by changing the position of the stopper.

Take care not to tighten the screws ❹ and ❺ too firm causing the breakage of the knob.

通常使用A侧

2285N出厂时摆动幅度规定为6mm，但是改变止动器的位置，可以最多调整到8mm.

固定螺丝 ❹ 、❺ 拧的过紧的话，摆动幅度调节钮会被拧破，请注意.

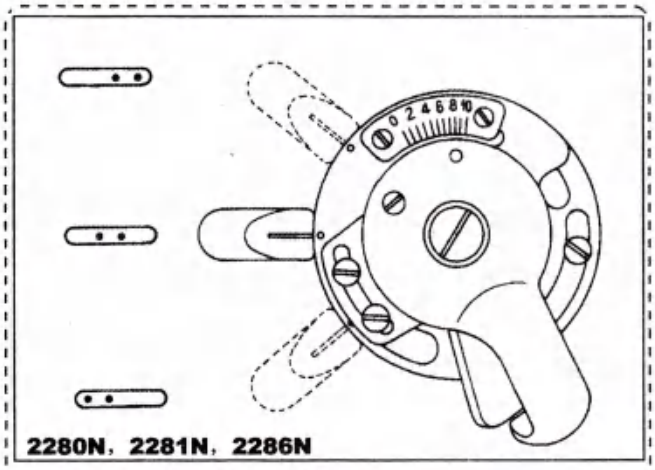

2280N，2281N，2286N

(2) Changing the needle position

★ **The models 2280N,-2281N,-2286N and 2288N have the needle position changing lever by which the needle position can be changed as desired.**

When changing the position of needle entry,move the needle position changing lever as whown in the figure on the left.

(2) 变更针位置

★ 2280，2281N，2286N，2288N上带自机针位置变更杆.
变更落针位置时，请如图所示那样移动变更针位置手柄.

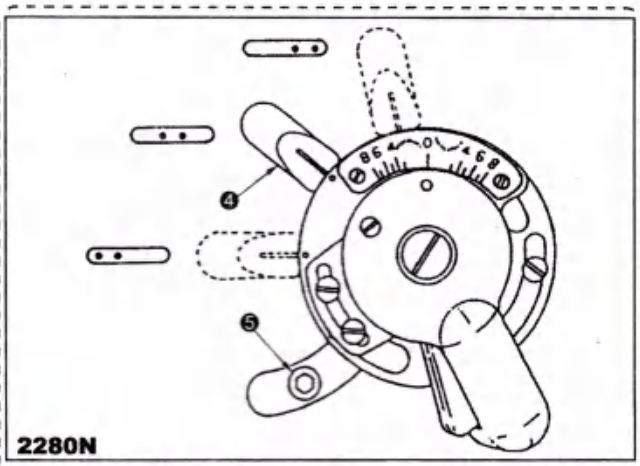

2280N

Loosen screw ❹ with a 4 mm hexagon wrench key supplied with the and change the position of needle entry by moving needle position changing lever ❺ .

1.When operating the machine,screw has to be tightened without fail.
2.When sewing an inverse pattern,the lever has to be positioned at the center of its adjustment range.

用附属的4mm六角扳手拧松螺丝 ❹ ，移动机针位置变更杆 ❺ ，可以变更机针的落针位置.

1.运转时，请一定要拧紧螺丝.
2.反转花样时，一定要把杆放到中央.

12.ADJUSTING PRESSURE OF THE PRESSER FOOT
压脚压力的调整

WARNING:
To avoid possible personal injury due to abrupt start of the machine,turn off the power to the machine and check to be sure that the motor has totally stopped rotating in prior.
注意:
为了防止突然启动造成人身事故，请关掉电源，请确认马达确实停止转动后再进行。

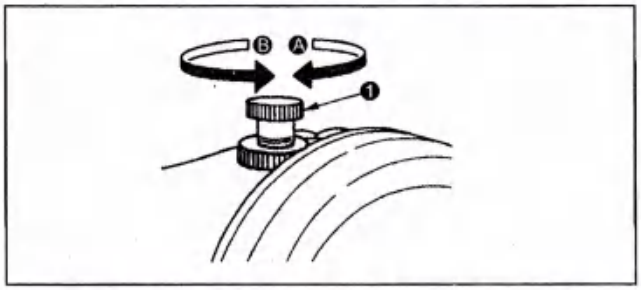

1) Turn the presser spring regulator ❶ clockwise Ⓐ to increase the pressure given by the presser foot.
2) Turn the presser spring regulator counterclockwise Ⓑ to decrease it.

* Refer to page 22 for the pressure of the presser foot of the 2285N model of sewing machine.

1) 向右方向 Ⓐ 转动压脚调节螺丝 ❶，压力变大.
2) 向左方向 Ⓑ 转动压力变小.
* 2285N机请参照P. 22

13.ADJUSTING THE HEIGHT OF THE PRESSER BAR
压脚杆高度的调整

WARNING:
To avoid possible personal injury due to abrupt start of the machine,turn off the power to the machine and check to be sure that the motor has totally stopped rotating in prior.
注意:
为了防止突然启动造成人身事故，请关掉电源，请确认马达确实停止转动后再进行。

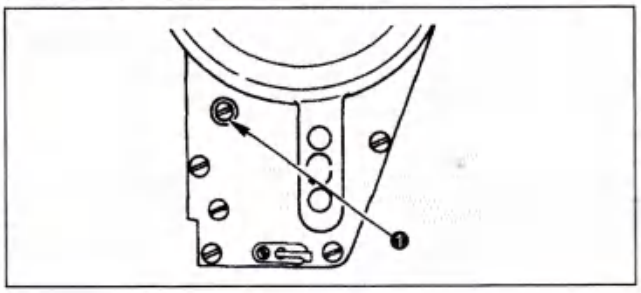

1) To change the height of the presser bar or the inclination of the presser foot,loosen the presser bar connection screw ❶ and perform the adjustment properly.
2) After the adjustment,securely tighten the screw.

1) 变更压脚杆高度和压脚角度时，拧松压脚轴套固定螺丝 ❶ 进行调整.
2) 调整后，把固定螺丝拧紧.

14.ADJUSTING THE MICRO-LIFTING MECHANISM OF THE PRESSER FOOT
压脚微量浮起调整

WARNING:
To avoid possible personal injury due to abrupt start of the machine,turn off the power to the machine and check to be sure that the motor has totally stopped rotating in prior.

注意:
为了防止突然启动造成人身事故，请关掉电源，请确认马达确实停止转动后再进行。

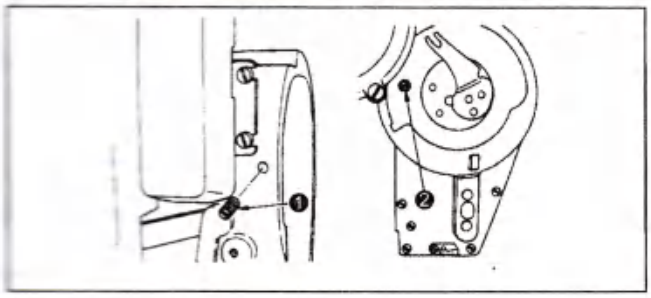

Some type of material needs to be sewn with the presser foot slightly lifted.
In this case,perform this adjustment following the procedure described below.

1) Loosen the setscrew ❶ in the presser foot micro-lifter.
2) Turn the presser foot micro-lifting screw ❷ clockwise through the hole in the face plate until the presser foot is raised as desired. Than,tighten the screw ❶ .

If you do not use the micro-lifting mechanism of the presser foot,fully return the presser foot micro-lifting screw ❷ to its home position.

根据缝制材料的需要，浮起压脚进行缝参照下列调整方法.

1) 拧松压脚浮起固定螺丝 ❶ .
2) 从机台的孔部，向右方向转动压脚浮起螺丝 ❷ ，把压脚升到需要的高度后拧紧固定螺丝 ❶ .

不要用时，请把压脚浮起螺丝 ❷ 返回到原来的位置.

15.ADJUSTING THE STITCH LENGTH
送布长度的调整

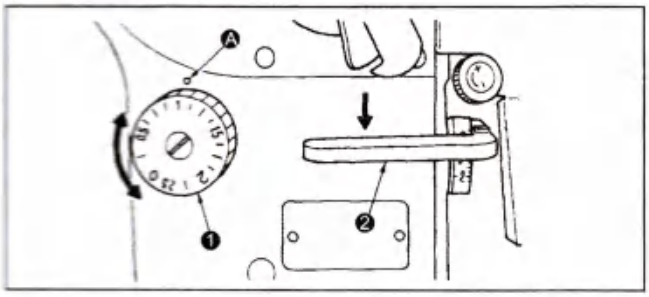

1) Turn the stitch length dial ❶ in the direction of the arrow so that the number corresponding to the desired stitch length meets the marker dot Ⓐ engraved on the machine arm.
2) Numbers on the stitch length dial are calibrated in "mm".
3) To change the stitch length from a larger value to a small value,turn the stitch lenght dial ❶ while pressing the feed lever ❷ in the direction of arrow.
   To perform reverse feed stitching,press down the feed lever ❷.The sewing machine performs reverse feed stitching as long as you keep the feed lever held pressed.The feed lever will return to its home position and the sewing machine will run in the normal stitching direction when you release the feed lever.

1) 顺箭头方向转动送布调节刻度盘 ❶ ，把希望的数字对准机臂刻度点 Ⓐ .
2) 刻度的数字为mm.
3) 从大向小变更送布刻度时，顺箭头方向按住送布杆 ❷ ，同时转动送布调节盘 ❶ .
   倒缝时，向下压倒缝送布杆 ❷ ,在压下的瞬间，可以倒缝.手松开后，倒缝送布杆返回原来位置，缝纫机恢复为正方向送布.

16.ADJUSTING THE DENSER STITCHING
压缩针脚的调整

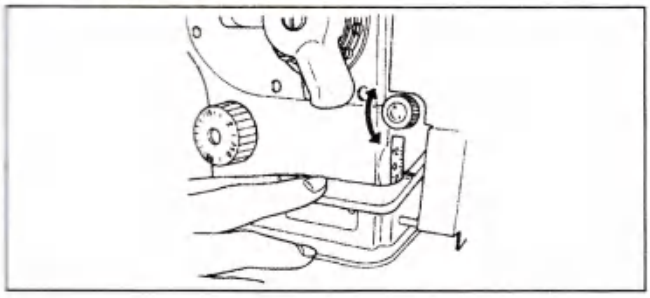

Stitch length can be reduced at the start or end of sewing.This feature is used for fastening stitch.

1) If you turn the dial with the feed lever held perssed down,the feed lever will move.Adjust the stitch length for denser stitching taking the graduation which meets the top surface of the feed ever reference.
2) Turn the dial in the "+" direction to reduce the reverse feed stitch length(i.e.the feeding direction gradually changes to the normal one). "+" means "normal feed stitch length is 2 mm" and "-1" means "reverse feed stitch length is 2 mm".
3) The denser stitching can be adjusted under the normal stitching mode (when the one-touch type reverse feed switch is actuated,the feed will not move in the reverse direction but the normal feed stitch length will be reduced).

开始缝纫和缝纫结束时让针迹的间距缩短，以及缝纫终止时等进行加固时使用.

1) 按下倒缝送布杆的同时转动拨盘 倒缝送布杆便移动，把刻度对准送布杆上的面调整密缝针迹.
2) 向+方向转动刻度盘，倒缝的针迹缩小（正送布的附件）.
   +2表示（正送布2mm），-2表示（送布2mm）.
3) 密缝调整（让倒缝按键动作，不进行倒缝，让正送的针迹变小）也可以进行.

* 刻度值最大概的数字，请边缝边调整.

17.HEIGHT AND INCLINATION OF THE NEEDLE DOG
送布牙的高度、倾斜度

WARNING:
To avoid possible personal injury due to abrupt start of the machine,turn off the power to the machine and check to be sure that the motor has totally stopped rotating in prior.

注意:
为了防止突然启动造成人身事故，请关掉电源，请确认马达确实停止转动后再进行。

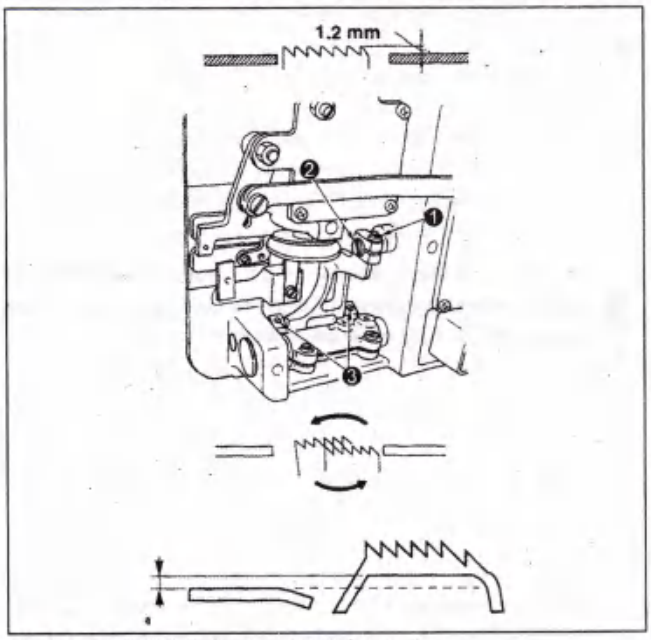

(1) Height of the feed dog

1) To adjust the height of the feed dog,loosen the screw ❶ and turn the feed driving link pin ❷ using a screwdriver.
2) The standard height of the feed dog is 1.2mm.
(in case of 2285N 0.9mm)
3) To adjust the inclination of the feed dog,loosen the two screw ❸ and turn the eccentric shaft inseting a screwdriver through the adjustment hole in the machine bed.
4) For the machine with a thread trimmer,there can be no space between the counter knife and the underside of the feed dog when adjusting the feed mechanism(change in height and timing) or using a commercially-available feed dog.

(2) Inclination of the feed dog

The standard inclination of the feed dog is obtained by adjusting the feed dog so that it becomes horizontal when it rises above the top surface of the throat plate.

*** For 2284C-7,see P.45**

(1)送布牙的高度

1) 调整送布牙高度时，如图所示拧松上下送布环轴的固定螺丝 ❶ ，用螺丝刀转动上下送布环轴 ❷ .
2) 送布牙的标准高度为1.2mm, 2285N为0.9mm.
3) 送布牙与护针器的倾斜度调整，如图所示拧松 2 根送布台轴固定螺丝 ❸ ，把螺丝刀穿过机座上的孔转动送布台轴.
4) 切线规格机种进行了送布调整(变更高度、同步等)，或使用市场出售的送布牙时，有可能固定刀和送布牙下面的空间没有了.
这时，可以往送布台下面的垫上送布台垫片（货号10025906)和在护针器下面垫上护针器垫片（货号22503908)以确保空间.

(2)送布牙的倾斜度

送布牙的标准倾斜度为针板与送布牙出来时呈水平状态.

＊有关2284NC-7，请参照P45的说明.

18.ATTACHING/REMOVING THE HOOK
旋梭的安装与拆卸

WARNING:
To avoid possible personal injury due to abrupt start of the machine,turn off the power to the machine and check to be sure that the motor has totally stopped rotating in prior.

注意:
为了防止突然启动造成人身事故，请关掉电源，请确认马达确实停止转动后再进行。

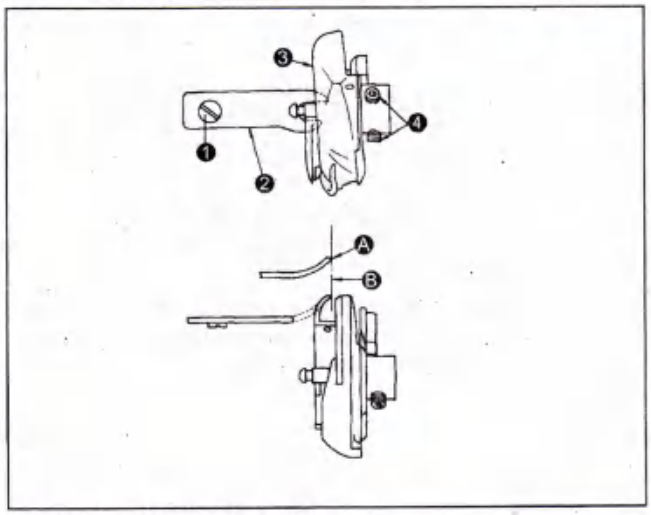

When you replace the sewing hook,remove it in the following procedures;

1) Turn the handwheel until the needle reaches to its highest position.
2) Remove the needle,presser foot,throat plate,feed dog and bobbin case from the machine.
3) Remove the setscrew ❶ and take out the bobbin case positioning finger ❷ .
4) Loosen the two screws ❹ and remove the sewing hook ❸.
   * Reverse the above procedures when inserting the sewing hook. At this time,make sure that top end Ⓐ of the bobbin case positioning finger is aligned with line Ⓑ .as shown in the figure on the left. Never let Ⓐ protrude from line Ⓑ.

The hook is exclusively designed to the 2280N Series model of sewing machine.When placing an order for the hook in case of replacement or the like,designate it with its part number.
Hook:22525851

更换旋梭时，请按照以下的顺序进行.

1) 转动手轮，把机针升到最高位置；2) 卸下机针、压脚、针板、送布牙、梭套；2) 卸下内旋梭固定螺丝 ❶ ，取下内旋梭挡块 ❷ ；4) 拧松2根送旋梭 ❸ 固定螺丝 ❹ ，取出旋梭. ＊安装旋梭时，请安与此相反的顺序进行. 这时，应让内旋梭前端 Ⓐ 与图的 Ⓑ 线基本一致. 但是，前端不能从 Ⓑ 线的右侧出来.

19.ADJUSTING HEIGHT OF THE NEEDLE BAR
针杆高度的调整

WARNING:
To avoid possible personal injury due to abrupt start of the machine,turn off the power to the machine and check to be sure that the motor has totally stopped rotating in prior.
注意:
为了防止突然启动造成人身事故，请关掉电源，请确认马达确实停止转动后再进行。

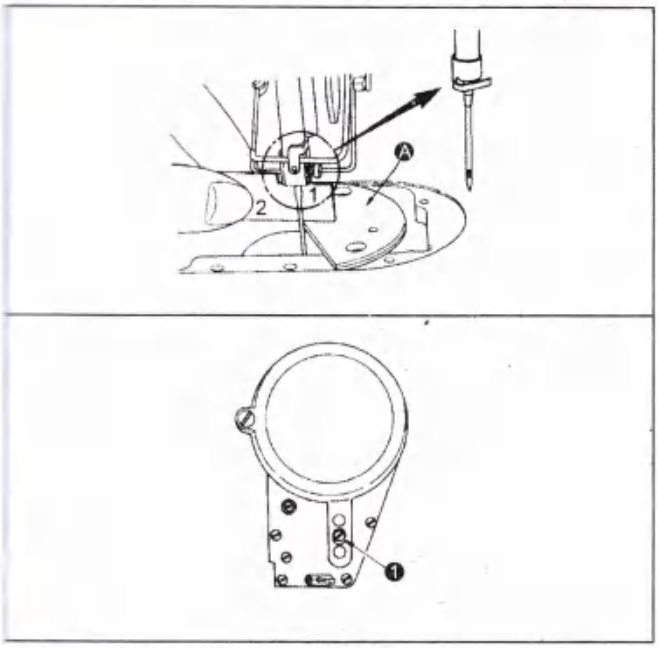

1) Set the zigzag width to "0",Bring the needle to the center of the zigzag stroke.
2) Rremove the presser foot,throat plate,semicircle plate and feed dog.
3) Place a semicircle plate on the plane,to which the throat plate is to be attached,of the bed.Loosen the screw ❶ ,and adjust so that a height difference of timing gauge 1 is provided between the lowest end of the needle bar and the top surface of the semicircle plate.

1.Thickness of the semicircle plate is different from that of the throat plate.So,be sure to use the semicircle plate when adjusting the height of the needle bar.
Be sure to perform the adjustment with zigzag width set to zero and with the needle positioned at the center of the zigzag stroke.
2.For the 2280N and 2282N,use the timing gauge on which the indication "D" is engraved.
For the other types of models (2285N, 2286N, 2281N, 2288N, 2284N and 2284NU), use the timing gauge on which the indication "E" is engraved.

1) 把摆动宽度设为0，针的位置应在中央.
2) 卸下压脚、针板、月牙板、送布板.
3) 把半月牙A放到机座上，如图所示拧松固定螺丝 ❶ ，把月牙板的上面到针杆的下端的高度调整成与同步板1相同的高度.

1.因针板和月牙板的厚度不同，所以调整时一定要使用月牙板.(调整时，必须将摆幅调整为0，在基线中心调整).
2.2280N、2282N请使用带有D刻印的同步板，其他机种(2285N、2286N、2281N、2288N、2284N、2284NU)请使用带有E刻印的同步板.

20.ADJUSTING THE NEEDLE-TO-HOOK TIMING AND THE NEEDLE GUARD
针和旋梭的同步以及针板的调整

WARNING:
To avoid possible personal injury due to abrupt start of the machine,turn off the power to the machine and check to be sure that the motor has totally stopped rotating in prior.
注意:
为了防止突然启动造成人身事故，请关掉电源，请确认马达确实停止转动后再进行。

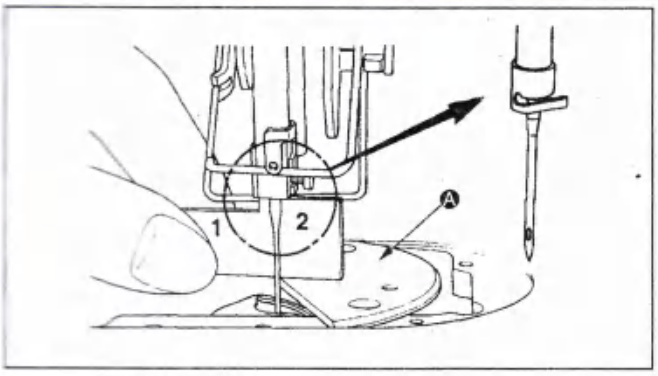

(1) Positioning the hook

1) After the completion of the adjustment of the needle bar height,adjust the hook using timing gauge 2 so that the blade point of the hook is aligned with the center of the needle.
2) At this time,the blade point of the hook should slightly come in contact with the needle when the needle guard does not touch the needle.

(2) Confirmation

Maximize the zigzag width(standard zigzag width of 2280N:5mm, standard zigzag width of 2286N:8mm).Bring the needle to the leftmost position of the zigzag stroke.Now,confirm that the top end of the needle eyelet is spaced 0.2 to 0.5mm away from the blade point of the hook.

- If the zigzag width is set to 10mm or the needle bar height is different from the standard one,re-adjust the height of the needle bar.

(1) 旋梭位置的调整

1) 调整完针杆高度后，在同步板2的高度，让旋梭尖正好最准针的中央.
2) 此时，护针器不要碰到机针，让旋梭尖轻轻与机针相碰.

(2) 确认

最大摆幅度时（标准为2280N:5mm, 2286N:8mm）的左摆，针孔上端和旋梭尖头的距离应为0.2-0.5mm.

- 摆动宽度10mm时，针杆高度不同时，请再次调整针杆高度.

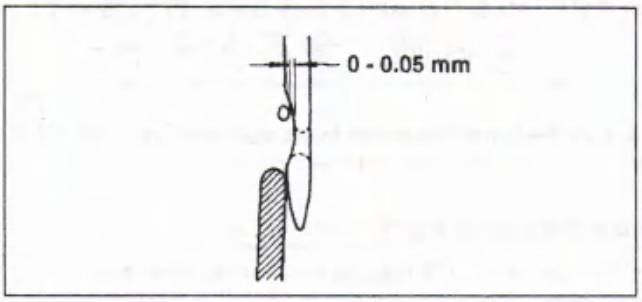

(3) Adjusting the needle guard

1) Maximize the zigzag width.Bend the needle guard to adjust so that the needle does not come int contact with the blade point of the both at the leftmost and rightmost positions of the zigzag stroke.At this time,adjust the clearance provided between the needle and the blade point of the hook to 0 to 0.05mm.
2) The needle guard functions to keep the needle away from the blade point of the hook,thereby perventing damage to the blade point of the hook,whenever you have replaced the hook with a new one,be sure to adjust the position of the needle guard.

(3) 针板的调整

1) 把摆动把宽度设置为最大，左右调整护针器，在左右位置都不使针和旋梭相碰. 此时，针和旋梭尖的间隙为0-0. 05mm.
2) 护针器是防止旋梭尖和针相碰损伤梭尖的装置，因此更换旋梭后一定要调整护针器的位置.

21.AUXILIARY THREAD TAKE-UP LEVER
辅助挑线杆

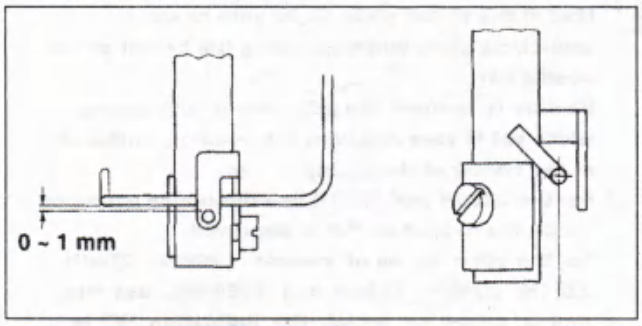

2280N系列有的出口装有辅助挑线杆.
标准安装尺寸如左图所示. 一般不需要调整，同时也请不要卸下来.
标准值为针杆在最下方时，针杆线孔上端离线簧0-1mm.
(最适值应根据线的种类不同)

The 2280N series model of sewing machine is equipped with an auxiliary thread take-up lever in accordance with the destination to be delivered.
The standard dimensions for installing the auxiliary thread take-up lever are shown in the figure on the left.For the normal operation of the sewing machine,it is not necessary to adjust the auxiliary thread take-up lever.Be sure not to remove it.
Position the auxiliary thread take-up lever so that the wire is spaced approximately 0 to 1 mm away from the top end of the thread eyelet of the needle bar when the needle bar is in the lowest position of its stroke.
(The optimum value of the distance between the wire and the thread eyelet of the needle bar slightly varies in accordance with the type of thread to be used.)

22.INSTALLING THE CONTROL PANEL
控制盘的安装

WARNING:
To avoid possible personal injury due to abrupt start of the machine,turn off the power to the machine and check to be sure that the motor has totally stopped rotating in prior.
注意:
为了防止突然启动造成人身事故，请关掉电源，请确认马达确实停止转动后再进行。

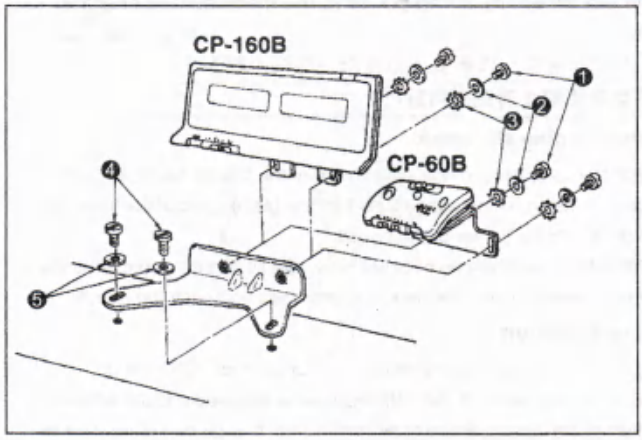

❶ SS7110840SP
❷ WP0450801SD
❸ WT0530002KS
❹ SS7120910SP
❺ WP0531001SC

23. ADJUSTING THE PEDAL
踏板的安装

WARNING:
To avoid possible personal injury due to abrupt start of the machine,turn off the power to the machine and check to be sure that the motor has totally stopped rotating in prior.
注意:
为了防止突然启动造成人身事故，请关掉电源，请确认马达确实停止转动后再进行。

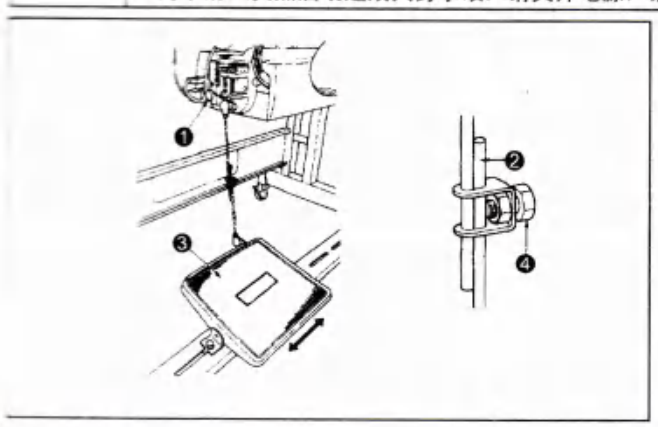

(1) Attaching the connecting rod

1) Move the pedal adjusting plate ❸ in the direction of the arrow to make the motor control lever ❶ and the pedal connecting rod ❷ straight.

(2) Inclination of the pedal

1) Inclination of the pedal can be adjusted by changing the length of the pedal connecting rod。
2) Loosen the adjusting screw ❹ ,and move up or down the connecting rod ❷ to change its length as desired.

(1) 连接杆的安装

1) 向箭头方向移动踏板调节板 ❸，让马达控制杆 ❶ 和连接杆 ❷ 成一直线.

(2) 踏板的角度

1) 调节连接杆的长度既可以改变踏板的角度.
2) 拧松调节螺丝 ❹，移动连接杆 ❷ 进行调节.

24. HOW TO OPERATE THE PEDAL
踏板的操作

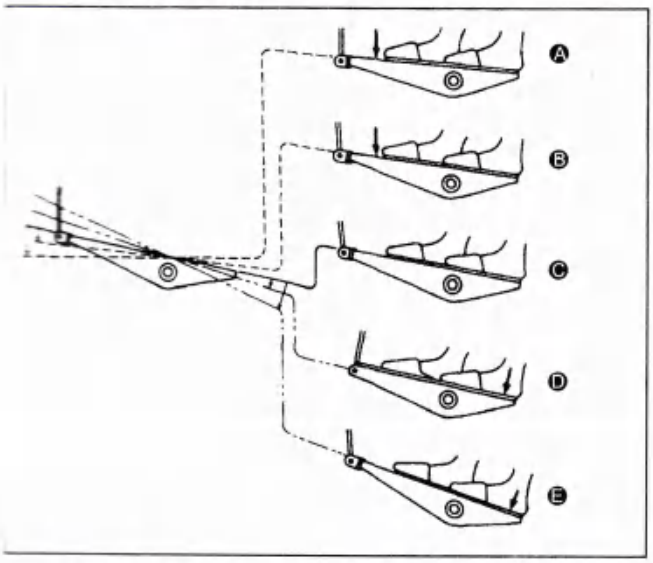

The pedal is operated in four stages.

1) Lightly depress the front part of the pedal for low-speed Ⓑ .
2) Further depress the front part of the pedal for high-speed operation Ⓐ .(Note that the sewing machine will enter the high-speed operation mode after the compietion of reverse feed stitching if the automatic reverse feed stitching function is specified with the corresponding switch.)
3) Bring the pedal back to its neutral position,and the sewing machine will stop running Ⓒ .
(The needle stops in the highest/lowest position.)
4) Strongly depress the back part of the pedal,and the thread trimmer will be actuated Ⓔ .
* Lightly depress the back part of the pedal,and the presser foot will go up Ⓓ .Further depress the back part of the pedal,and the thread trimmer will be actuated.

踏板有4级操作.

1) 向前轻轻踩踏板为低速缝纫 Ⓑ ；
2) 在继续往前踩踏板为高速缝纫 Ⓐ ；(但是，设定了自动倒缝开关后，倒缝结束之后为高速缝纫)；3) 轻轻踩踏板然后返回缝纫机停止 Ⓒ (机针为上停止或下停止)；4) 向后踩踏板为切线动作 Ⓓ ＊ 向后轻轻踩踏板，为压脚提升动作 Ⓔ ，在继续踩踏板为切线动作.

25. ADJUSTING THE STOP POSITION OF THE NEEDLE
机针停止位置的调整

WARNING:
To avoid possible personal injury due to abrupt start of the machine,turn off the power to the machine and check to be sure that the motor has totally stopped rotating in prior.
注意:
为了防止突然启动造成人身事故，请关掉电源，请确认马达确实停止转动后再进行。

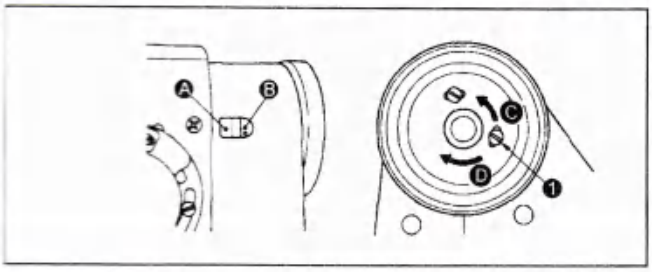

(1) Stop position of the needle after thread trimming

1) The needle stops at the standard stop position when red marker dot Ⓐ engraved on the machine arm is aligned with white marker dot Ⓑ engraved on the handwheel.
2) Stop the needle at the highest position of its stroke,loosen the screw ❶ ,and adjust the stop position of the needle after thread trimming by moving the screw ❶ within the slot.
① Move the screw in the direction Ⓒ to advance the timing to

make the needle stop.

② Move the screw in the direction Ⓑ to retard the timing to make the needle stop.

Do not operate the sewing machine with the screw ❶ loosened.Only loosen the screw ❶ and do not remove it.

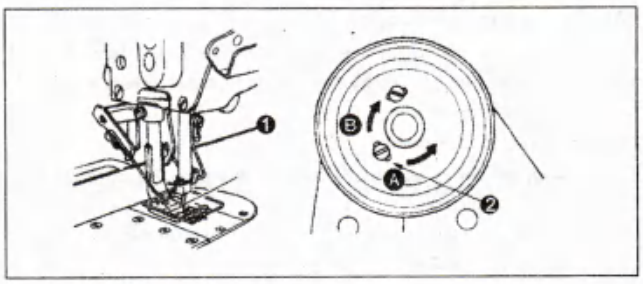

(2) 下停止位置

1) 踏板从前踩踏为中立时的机针下停止位置与上停止同样，让机针❶下停止之后拧松螺丝❷，在长孔范围内进行调整. 向Ⓐ方向移动机针停止位置提前，向Ⓑ方向移动机针停止位置推移.

拧松螺丝❶的状态下能不要运转缝纫机.
此螺丝只能拧松不能拧下来.

(1) 切线后的停止位置

1) 标准的机针停止位置是机架的刻点Ⓐ和飞轮的白刻点Ⓑ对齐的位置.
2) 让机针上升到停止位置，拧松螺丝❶，在长孔范围进行调整.
① 向Ⓒ方向移动机针停止提前.
② 向Ⓓ方向移动机针停止推移.

拧松螺丝❶状态下请不要运转缝纫机.
此螺丝只能拧松而不能拧下来.

(2) The lowest stop position of the needle

When you return the pedal to its neutral position after having depressed the front part of it,the needle stops at the lowest stop position,As in the case of the adjustment of the hightest stop position of the needle,stop the needle ❶ in the lowest position of its stroke,loosen the screw ❷,and adjust the lowest stop position of the needle by moving the screw ❷ within the slot.Move the screw in the direction Ⓐ to advance the timing to make the needle stop or in the direction Ⓑ to retard it.

Do not operate the sewing machine with the screw ❷ loosened.Only loosen the screw ❷ and do not remove it.

26. ONE-TOUCH TYPE REVERSE FEED SWITCH LEVER
触键手动倒缝

WARNING:
To avoid possible personal injury due to abrupt start of the machine,turn off the power to the machine and check to be sure that the motor has totally stopped rotating in prior.

注意：
为了防止突然启动造成人身事故，请关掉电源，请确认马达确实停止转动后再运行。

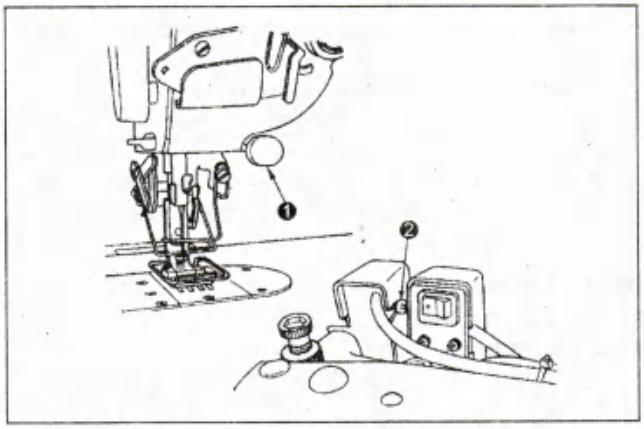

(1) How to use the reverse feed switch lever

1) Press down the swith lever ❶ ,and the machine will immediately run in the reverse direction.
2) Reverse stitching is performedd as long as you keep the lever held pressed down.
3) Release the swith lever,and the machine will immediately run in the normal direction.

(1) 使用方法

1) 按开关拨杆❶，缝纫机立即变为倒送，进行倒缝.
2) 按下拨杆的时间，可以进行倒缝.
3) 放开拨杆，则立即返回正缝.

(2) Height of the reverse feed switch lever

1) Adjust the height of the switch lever ❶ for your convenience.
2) Loosen the screw ❷ ,and adjust the height of the switch lever as desired by moving it up or down.

(2) 开关拨杆的高度

1) 请把开关拨杆❶的高度调整到使用方便的位置.
2) 拧松螺丝❷，上下移动就可以调整高度.

27. ADJUSTING THE THREAD TRIMMER
切线的调整

WARNING:
To avoid possible personal injury due to abrupt start of the machine,turn off the power to the machine and check to be sure that the motor has totally stopped rotating in prior.

注意:
为了防止突然启动造成人身事故，请关掉电源，请确认马达确实停止转动后再运行。

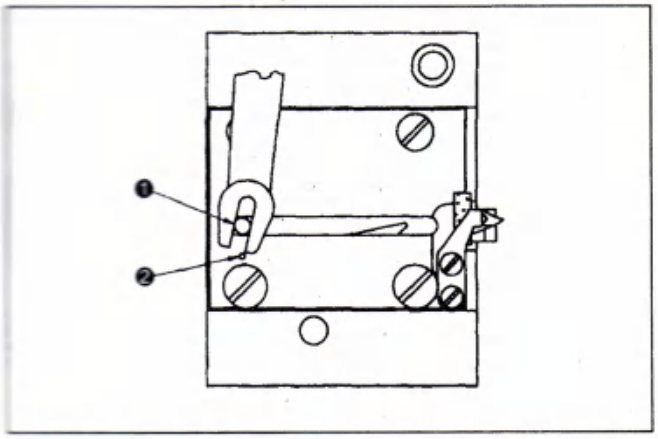

(1) Initial position of the moving knife

When the moving knife is in its initial position,the moving knife pin ❶ should be aligned with the engraved marker dot ❷ as shown in the figure on the left.

(1) 移动刀的初期位置

移动刀的初期位置如图所示，让移动刀销钉 ❶ 与刻点 ❷ 一致。

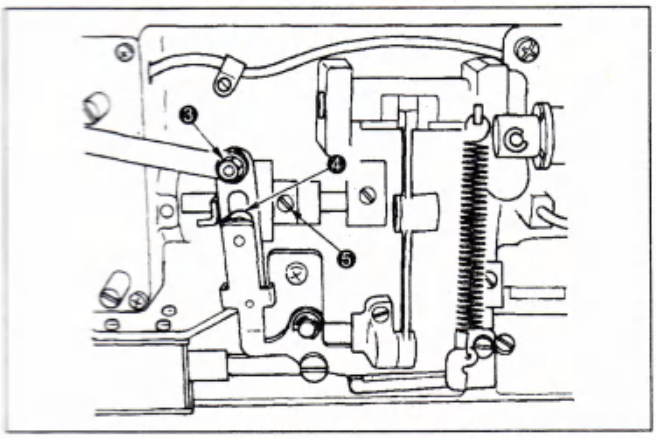

*** If the initial position of the moving knife is not correct**

Loosen the nut ❸ ,and move the moving knife to the right or left until the pin ❶ meets the marker dot ❷ .
Then,tighten the nut ❸ .

*** 初期位置不正确时**

拧松螺母 ❸ ，左右移动，调整 ❶ - ❷ .
在适合的位置拧紧螺母 ❸ .

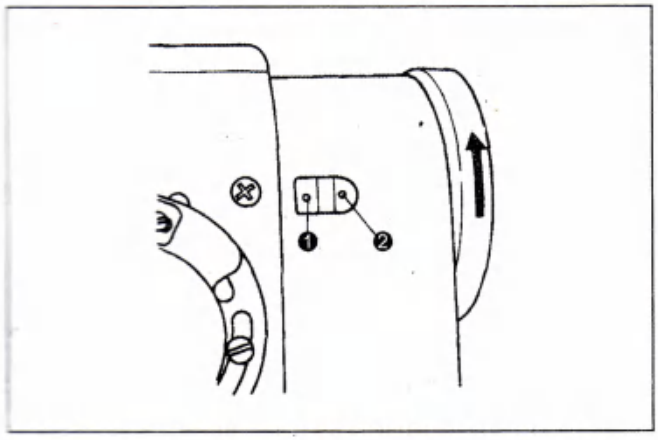

(2) Adjusting the thread trimming timing

Put the roller ❹ in the cam groove,Now,gradually turn the handwheel in the reverse direction.The handwheel will go no further when the red marker dot ❶ engraved on the machine arm is aligned with the red marker dot ❷ engraved on the handwheel.
To adjust the thread trimming cam,align the red marker dot on the machine arm with the red marker dot on the handwheel,put the roller in the groove of the thread trimming cam,and turn the handwheel in the direction opposite to the direction of rotation of the hook driving shagt until it will go no further.Now,tighten the two screws ❺ .

(2) 切线同步的调整

把凸块 ❹ 嵌入凸轮槽的状态，静静的逆转飞轮时，机架的刻点 ❶ 和飞轮的红刻点 ❷ 对准的位置，飞轮不能转动.
调整切线凸轮时，机架罩和飞轮的红刻点对齐，凸轮嵌入凸轮槽的状态下，慢慢向与下轴转动相反的方向转，在停止的位置把螺丝 ❺ 固定起来.

28. NEEDLE THREAD FEEDING DEVICE
切线的调整

WARNING:
To avoid possible personal injury due to abrupt start of the machine,turn off the power to the machine and check to be sure that the motor has totally stopped rotating in prior.
注意:
为了防止突然启动造成人身事故，请关掉电源，请确认马达确实停止转动后再运行。

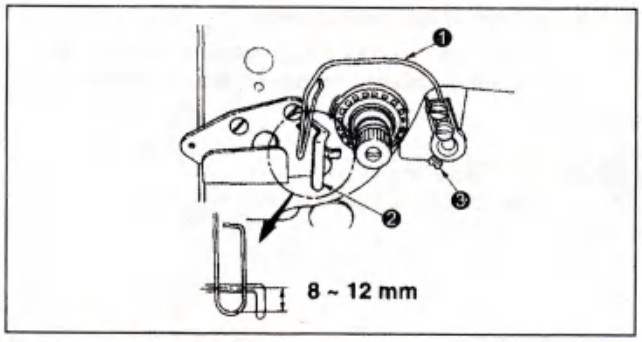

(1) Position of the feeding wire

Adjust the installing position of the feeding wire ❶ so that a distance of 8 to 12 mm is provided between the guide portion ❷ of the thread guide A and the top end of the wire.
Then,tighten the two screw ❸.

(1) 拉线钢丝的位置

安装拉线钢丝 ❶ 时，请把挑线杆导向器A ❷ 和钢丝前端的距离调整为8-12mm, 然后固定好固定螺丝 ❸ (2个).

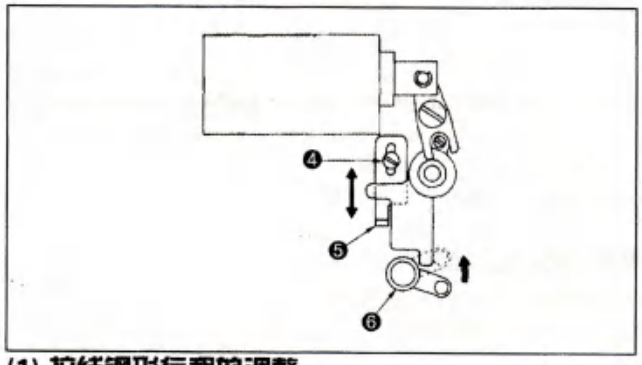

(2) Adjusting the stroke of the feeding wire

1) Increase the feeding amount of the needle thread if the needle thread fails to interlace with the bobbin thread or is likely to slip out of the needle eyelet at the start of sewing.
2) To increase the feeding amount of the needle thread,loosen the screw ❹ in the feeding stopper ❺ and move down the stopper.

If the feeding amount of the needle thread is excessive,the thread will be likely to break.

*** When the feeding wire is not used**

Pull up the stopper knob❻ ,turn it counterclockwise and fit the top end of the knob in the hole located above the knob.

(1) 拉线钢形行程的调整

1) 开始缝，如有针迹松脱或线容易拔出时，请把拉线量增大.
2) 把拉线量增大时，请拧松拉线挡块 ❺ 的固定螺丝 ❹，向下移动调整.

拉线量过大时，会容易发生断线现象

*** 拉线钢丝不能动时**

向上拉挡块旋钮6, 左右转动让其前端进入上方的孔内.

29. POSITION OF THE WIPER
拨线器的位置

WARNING:
To avoid possible personal injury due to abrupt start of the machine,turn off the power to the machine and check to be sure that the motor has totally stopped rotating in prior.
注意:
为了防止突然启动造成人身事故，请关掉电源，请确认马达确实停止转动后再运行。

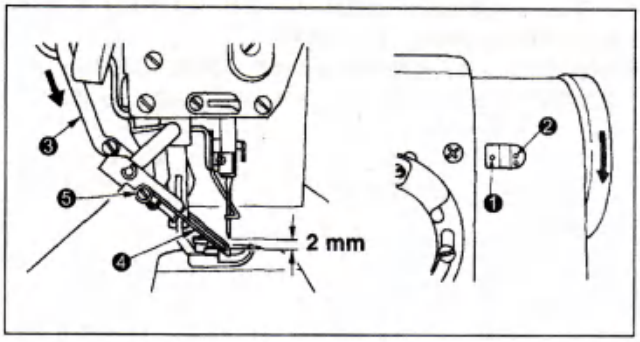

1) Align the red marker dot ❶ engraved on the amchine arm with the white marker dot ❷ engraved on the handwheel(the 2nd white marker dot in terms of the direction of rotation of the sewing machine.
2) Move the rod ❸ in the direction of the arrow,and adjust the clamping screw ❺ so that an approximate 2 mm clearance is provided between the top end of the needle and the wiper ❹.

1) 把机臂的红刻点 ❶ 对准手轮的白刻点 ❷（缝纫机旋转方向的第二个白刻点）.
2) 沿箭头方向转动杆 ❸ ，把针前端和拨线杆 ❹ 的间隙调整为2mm左右，然后再拧紧固定螺丝 ❺.

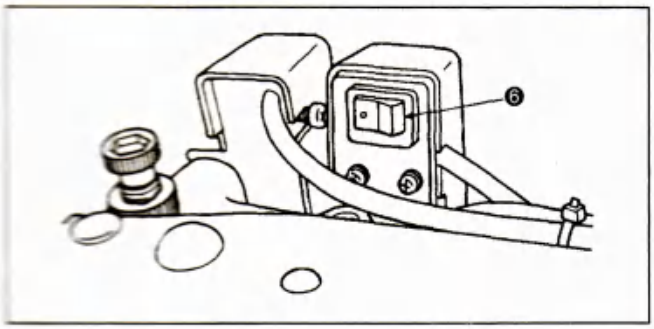

3) If you do not use the wiper,turn OFF the seesaw switch ❻ of the wiper.

3) 不需要使用拨线杆时，请关掉拨线开关 ❻ .

30. REPLACING THE PATTERN CAM FOR 2288N

2288N花样凸轮的更换

WARNING:
To avoid possible personal injury due to abrupt start of the machine,turn off the power to the machine and check to be sure that the motor has totally stopped rotating in prior.

注意：
为了防止突然启动造成人身事故，请关掉电源，请确认马达确实停止转动后再运行。

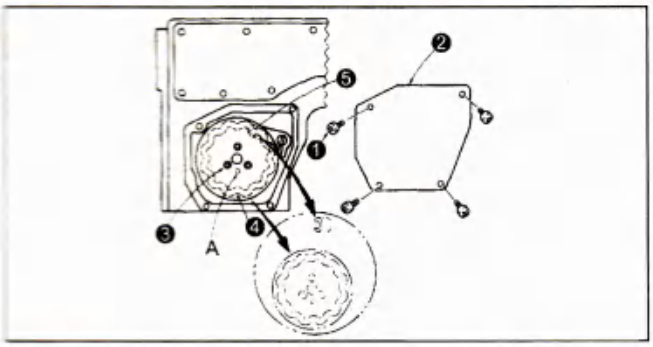

1) Replacing the pattern cam

1) Remove the four screws ❶ and remove the cover ❷.
2) Remove the three screws ❸ with a 4 mm hexagon wrench. Key supplied with the machine. Then,remove the cam ❹ and the roller ❺.

(1) 花样凸轮的拆卸方法

1) 卸下4个固定螺丝 ❶ ，再卸下防护罩 ❷.
2) 用附属的4mm扳手卸下3个固定螺丝 ❸ ，然后再卸下凸轮 ❹ 和凸块 ❺ .

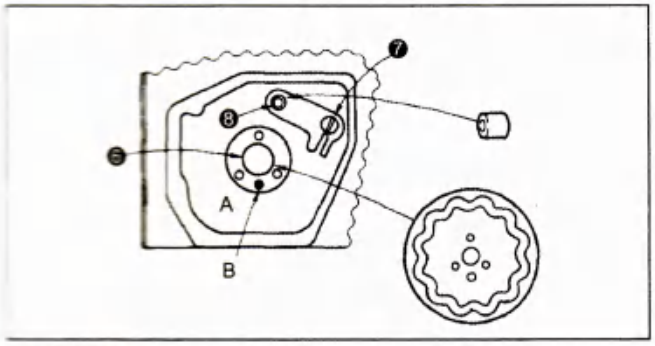

2) Attaching procedure of the pattern cam

1) Attach a new roller to the pin ❽,put the cam over the shaft ❻ and press the cam until it comes in contact with the roller.
2) Turning the cam by means of the slot in ❼,thrust the roller in the groove on the cam.
3) Then,lightly turn the cam by hand to make the hole A to be aligned with the pin B and fit the pin in the hole.
(The shaft protrudes from the cam by approximately 2mm.)
4) Tighten the screws and attach the cover in position.

The cam and roller have to be always replaced together.

(2) 花样凸轮的安装方法

1) 把新的凸块安装到销钉 ❽ 上，把凸轮穿到轴 ❻ 上并顶到凸块.
2) 用 ● 的复口转动，把凸块压进凸轮的里面.
3) 用手轻轻的转动凸轮，孔A对准销钉B，压进去.（轴比凸轮突出约2mm）
4) 拧紧固定螺丝，安装好防护罩.

请一定要换凸轮和凸块.

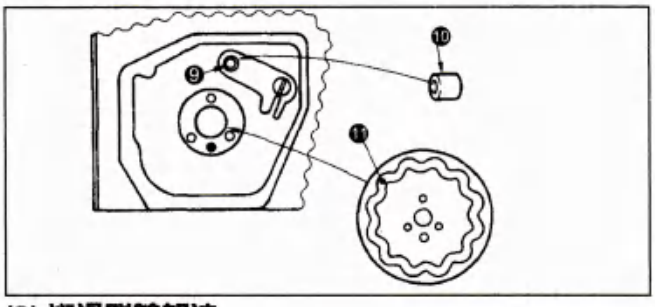

(3) Application of grease

1) When replacing a cam or periodically once every six months, replenish grease to the cam components.
2) Apply grease to pin ❾,roller ❿ and inside cam groove ⓫.
3) Use Lithium-based grease.
Lithium-based grease No.2

Manufacturers	Name of grease
ESSO	Listan 2,Beacon 2
SHELL	Alibania
NIPPON SEKIYU	Multinock 2,Epincok 2
KYODO SEKIYU	Rezonix 2
IDEMITSU KOSAN	Koronex 2

(3) 润滑脂的加油

1) 更换凸轮后和每半年更换一次润滑脂.
2) 润滑脂加油地点有：销钉❾、凸块❿、凸轮沟⓫.
3) 请使用锂系润滑脂.
锂系2号润滑脂

厂家名称	品名
EESO	Listan 2, Bescon 2
壳牌石油	Albania
日本石油	Multinock 2, Epinock 2
共同石油	Rezonix 2
山光兴产	Koronex 2

31. ADJUST!NG 2285N MODEL OF SEWING MACHINE

2285N的调整

WARNING:

To avoid possible personal injury due to abrupt start of the machine,turn off the power to the machine and check to be sure that the motor has totally stopped rotating in prior.

注意:

为了防止突然启动造成人身事故，请关掉电源，请确认马达确实停止转动后再运行。

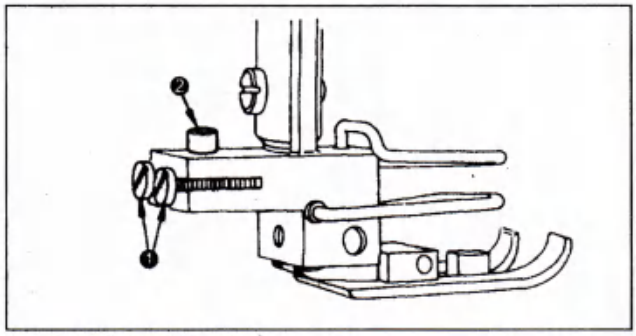

(1) Adjusting uneven material feed of the right and left wings of the presser foot of the 2285N

1) If the right and left wings of the presser foot fail to feed the material uniformly,loosen the clamp screw ❷and tighten or loosen the pressure adjusting screws ❶ of the wing of which pressure is lower than the other wing so that both wings of the presser foot evenly apply pressure to the material.Note that this adjustment will be invalid when the presser spring regulator has been excessively tightened.After the completion of the adjustmeng,tighten the clamp screw ❷ .

(1) 左右送布不同的调整

1) 左右送布不同时，请拧松压脚压力固定螺丝 ❷ ，把送布力弱的压脚压力调整螺丝 ❶ 拧紧，把压力强的调整螺丝拧松. 但是要注意压力过强的话，有可能不能调整. 清调整结束后再把固定螺丝 ❷ 拧紧.

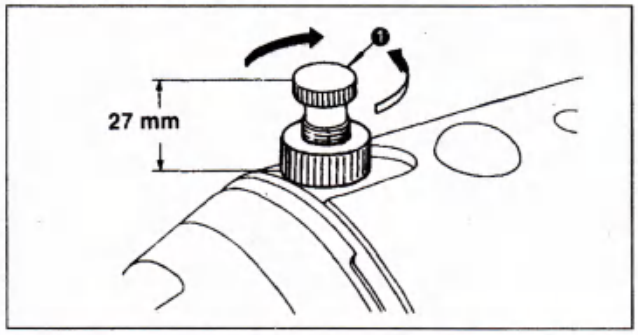

2) Fox 2285N model of sewing mchine,uneven material feed caused by a pressure difference between the right and left wings of the presser foot cannot be adjusted when the pressure of the presser foot has been excessively increased.The standard pressure(approximately 24.5N) is obtained when the top end of the presser spring regulator rises above the seat by 27mm.

2) 2285N压脚压力过大的话，左右送布就不能调整.
标准为底座到调整螺丝上端的距离为27mm(约24. 5N).

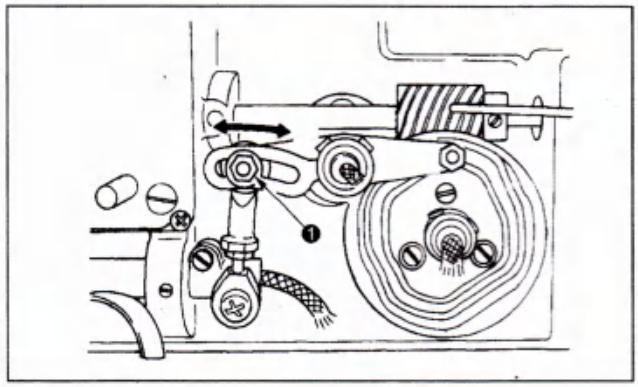

(2) Adjusting the stitch length

1) Tilt the machine head away from you.
2) Loosen the nut ❶.
3) Move the rod to the left to increase the stitch length,or to the right to decrease it.
4) Securely tighten the nut ❶.
5) Lift the machine head properly.

(2) 缝距的调整

1) 把缝纫机向后方放倒.
2) 拧松螺母 ❶.
3) 弄长缝距时，向左移动杆，弄短缝距时，向右移动杆.
4) 把螺母 ❶ 拧紧.
5) 缝纫机放回原有位置.

32. PEDAL-OPERATED REVERSE FEED DEVICE（RF-1）
踏板倒缝装置(RF-1)[选购品]

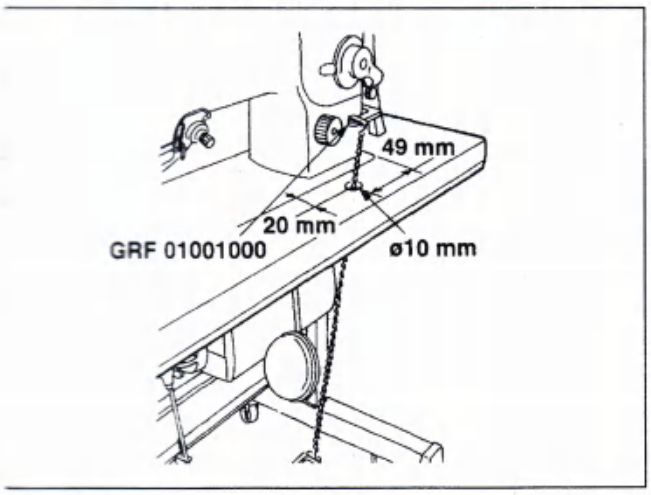

When you sew bulky materials,it is not easy to operate the feed lever with your right hand to make the machine perform reverse feed stitching.
In this case,attach the RF-1 device to your sewing machine.This devece allows you to reverse the sewing directions as desired with your foot instead of your right hand.
The figure on the left shows the device installed on the sewing machine When using the device,be sure to replace the feed lever tension spring (MAT80117S00)supplied with the RF-1.

为了方便使用双手来操作，请使用RF-1装置.此装置可以不用右手便可方便地进行倒缝.
如图所示，安装时必须同时把送布杆弹簧（B1646555000）.
换成RF-1附属的弹簧(MAT80117S00).

33. MOTOR PULLEY AND BELT
马达皮带轮和皮带

(1)For the sewing machine without a thread trimmer

1) The driving motor of this machine is a 400 watts(2P) clutch motor.
2) Use the M type V belt.
3) The attainable sewing speeds are determined by the diameter of the motor pulley and the length of the belt as listed below.

Outer diameter of motor pulley(mm)	Motor puller part No.	Sewing speed(rpm)		Belt length mm(inch)	Belt Part No.
		50Hz	60Hz		
135	MTKP0130000	5480	----	1168(46)	MTJVM00460A
130	MTKP0125000	5270	----		
125	MTKP0120000	5060	----	1143(45)	MTJVM00450A
120	MTKP0115000	4850	----		
115	MTKP0110000	4630	----		
110	MTKP0105000	4440	5330	1118(44)	MTJVM00440A
105	MTKP0100000	4250	5040		
100	MTKP0095000	4000	4780		
95	MTKP0090000	3820	4540		
90	MTKP0085000	3610	4320	1092(43)	MTJVM00430A
85	MTKP0080000	3390	4000		
80	MTKP0075000	3160	3790		
75	MTKP0070000	2950	3520		
70	MTKP0065000	2740	3260		
65	MTKP0060000	2530	3020	1067(42)	MTJVM00420A
60	MTKP0055000	2320	2760		

(1) 无切线时

1) 请使用输出功率400V(2P)的离合马达.
2) 请使用M型V型皮带.
3) 马达皮带轮和皮带长度、缝纫机转速的关系如下表所示.

马达皮带轮外径 (mm)	精密牌带轮的货号	风速(rpm)		皮带长度 mm(inch)	皮带货号
		50Hz	60Hz		
135	MTKP0130000	5480	----	1168(46)	MTJVM00460A
130	MTKP0125000	5270	----		
125	MTKP0120000	5060	----	1143(45)	MTJVM00450A
120	MTKP0115000	4850	----		
115	MTKP0110000	4630	----		
110	MTKP0105000	4440	5330	1118(44)	MTJVM00440A
105	MTKP0100000	4250	5040		
100	MTKP0095000	4000	4780		
95	MTKP0090000	3820	4540		
90	MTKP0085000	3610	4320	1092(43)	MTJVM00430A
85	MTKP0080000	3390	4000		
80	MTKP0075000	3160	3790		
75	MTKP0070000	2950	3520		
70	MTKP0065000	2740	3260		
65	MTKP0060000	2530	3020	1067(42)	MTJVM00420A
60	MTKP0055000	2320	2760		

(2) For the sewing machine with a thread trimmer

1) Be sure to use the motor in combination with an SC-1.Use the motor pulley of which outside diameter is 70 mm.

2) Use the proper exclusive HM type V belt of 1016 mm(MTJVH00430A).

(2) 带切线时

1) 请一定使用SC-800 马达，马达皮带轮的外径为70 mm.

2) 请使用专用的HM型V型皮带1016mm(MTJVH00400A).

34.TROUBLES AND CORRECTIVE MEASURES

Trouble	Cause	Corrective measures	See page
Thread breakage	1.When the thread gets entangled in the thread take-up lever.	Remove the entanglement.	9
	2.When the needle thread is threaded in a wrong way.	Thread it correctly.	9
	3.When the thread gets entangled in the sewing hook.	Remove the entanglement.	15
	4.When the needle thread is excessively tight or loose.	Adjust the thread tension.	10
	5.When the needle thread slips in the rotary tension.	Increase the tension of the pretension disk.	10
	6.When the tension of the thread take-up spring is excessively high or low.	Adjust the tension of the take-up spring.	10
	7.When the stroke of the thread take-up spring is excessively large or small.	Adjust the stroke of the take-up spring. (8 to 12 mm)	15
	8.When the timing of the sewing hook and the needle is not matched.	Adjust the timing.	15
	9.When there is a scratch on the thread path of hook.	Remove such a scratch or replace the compment.	
	10.When the thread is not suitable.		
	a.The quality of the thread is poor.	Use a thread of good quality.	
	b.The thread is too thick for the needle.	Use a suitable thread or needle.	
	c.The thread is broken by heat.	Use silicone Oil Lubricant unit.	
	11.When the stitch is skipped.	Refer to the following parageraphs,Stitch skipping.	
Stitch skipping	1.When the needle is inserted in a wrong way.		
	a.The needle is not entirely inserted into the needle bar	Fully insert the needle	7
	b.The needle eye is not facing straight to the operator.	Let the needle eye face straight to the operator.	7
	c.The needle is facing backwards.	Let the long groove on the needel face to the operator.	7
	2.When the needle itself is not suitable.		
	a.The needle is bent.	Replace it with a new needle.	7
	b.The quality of the needle is not good.	Use a needle of good quality.	
	c.The needle is too thin for the thread.	Use a suitable needle or thread.	
	d.Blunt needle is used.	Replace it with a new needle.	
	3.When the hook blade point is not sharp enough or damaged.	Resharpen the hook or replace it.	
	4.When the timing of the sewing hook and the needle is not matched.	Adjust the timming properly.	15
	5.When the height of the needle bar is not correct.	Adjust the height of the needle bar.	15
	6.When the clearance between the needle and the sewing hook is too great.	Adjust the clearance.	16
	7.The position of the auxiliary thread take-up lever is wrong.	Adjust the position of the auxiliary thread take-up lever properly.	
Loosen stitch	1.When the needle thread tension is too low.	Increase the needle thread tension.	10
	2.When the tension of the thread take-up spring is too low.	Increase the tension of the spring.	10
	3.When the tension of the bobbin thread is too high.	Decrease the bobbin thread tension.	10
	4.When the timing of the sewing hook and the needle is not matched.	Adjust the timing correctly.	51
	5.When the thread is too thick for the needle.	Use a suitable needle or thread.	
	6.Thread slips out of the rotary tension.	Increase the tension of the pretension disk.	10
Unegular stitch tightness	1.When the bobbin thread tension is too low.	Increase the bobbin thread tension.	10
	2.When the bobbin thread is not wound correctly.	Wind up the bobbin thread evenly.	8
	3.When there is a scratch on the thread path of the sewing hook,bobbin case,thread take-up lever or any other parts.	Remove such a scratch or replace the component	
Needle breakage	1.When the needle is bent.	Replace it with a new needle.	
	2.When the quality of the needle is not good.	Use a needle of good quality.	
	3.When the needle is not entirely inserted into the needle bar.	Insert the needle into the needle bar as far as it will go..	7
	4.When the needle hits the sewing hook.	Adjust the timing and clearance between the needle and the sewing hook and also the position of the needle guard.	15
	5.The needle is too thin for the sewing material and thread.	Replace a suitable needle.	
	6.The needle hole in the throat plates is too narrow.		
	7.The needle hits against the throat plate.		
	8.The needle hits against the presser foot.		

34. 缝制不良的原因和处理方法

现象	原因	处理方法	参考页
断线	1、挑线杆上绕线	拆除卷绕的线	9
	2、上线的穿线方法不对	正确的穿线	9
	3、旋梭上绕线了	拆除卷绕的线	15
	4、上线张力过强或过弱	把张力调整到适当	10
	5、张力弱，线打滑	加强张力	10
	6、挑线弹簧张力过强，或过弱	把张力调整到适当	10
	7、挑线弹簧的工作范围过大或过小	调整到适当的动作范围（8-12mm）	10
	8、机针和旋梭的同步不好	调整同步	15
	9、旋梭，梭壳、挑线杆等等线道上有伤痕	修正伤害，或更换新品	
	10、线有问题		
	a. 线的质量不好	换成质量好的线	
	b. 线比针粗	使用适当的针活适当的线	
	c. 冼受热溶解	安装线冷却装置	
	11、跳针	参照下一项目跳针	
跳针	1、机针的安装方法不正确	把针插到针杆的深处	7
	a. 没有完全插入针杆	把针安装到正面	7
	a. 针孔没有对正	插到针杆的里面	7
	a. 针装反了		
	2、机针有问题		
	a. 针弯了	换新针	7
	a. 针的质量不好	换质量好的针	
	a. 针鼻线细	换合适的针或合适的线	
	a. 针尖豁了	换新针	
	3、旋转尖弯曲和折断	修理旋梭尖，或换新品	15
	4、机针和旋梭的同步不好	调整同步	15
	5、针杆的高度不适当	调整针杆高度	15
	6、针和旋梭的间隙过大	调整间隙调整辅助跳线杆的位置	16
	7、辅助挑线杆的位置不正确		
紧线不良	1、上线张力过弱	增强张力	10
	2、挑线弹簧的张力过弱	增强张力	10
	3、底线张力过强	增强张力	10
	4、机针和旋梭的同步不好	调整同步	15
	5、与针相比线过粗	使用适当得当针或适当的线	
	6、张力弱，线打滑	增加皮带张力	10
紧线不匀	1、底线张力过弱	增强张力	10
	2、底线绕线不好	正确绕线	8
	3、旋梭、梭壳、挑线杆等线道有伤痕	修理伤痕，或更换新品	
断针	1、机针弯曲了	换新针	
	2、针的质量不好	换质量好的针	
	3、针没有完全插入针杆	插到针杆的里面	7
	4、针与旋梭相碰	调整针和旋梭的同步，间隙，针座的位置	15
	5、与缝制物的线相比针过细	换合适的针	
	6、针板的针孔过细		
	7、针和针板向碰		
	8、针和压脚相碰		

2282N
2282-7

High-speed,1-needle,Lockstitch,Standard Zigzag Stitching Machine with Lower Knife

高速单针平缝2点曲折缝缝纫机（带下切刀）

CAUTION:
Instructions described in these pages are for 2282N,2282N-7 only.
Instructions other than those described there are the same as those for 2280N,2280N-7

注意:
本书只记述有关 2282N，2282N-7系列的说明，本书以外的有关项目与2280N，2280N-7相同.

CONTENTS

Ⅰ. SPECIFICATIONS

Ⅱ.INSTALLATION

1.Checking of setting the supply voltage....28
2.Installing the electrical box....28
3.Connecting the power cable....30
4.Connecting the cords....30

Ⅲ.PERPARATION OF THE MACHINE

1.Changing the knife height....31
2.Adjusting the knife perssure....31
3.Adjusting the installation of the knife start switch....32

Ⅳ.PEDAL OPERATION....32

Ⅴ.MAINTENANCE....33

1.Replacing the knives....33
2.Replacing the power fuse....33

目　录

Ⅰ.规格....28

Ⅱ.安装....28

1. 确定电源电压的设定....28
2. 电气箱的安装....29
3. 电源线的连接....30
4. 电线的连接....30

Ⅲ.缝纫机的准备....31

1. 切刀高度的变更....31
2. 切刀压力的调整....31
3. 切刀启动开关的安装调整....32

Ⅳ.踏板操作....32

Ⅴ.维修....33

1. 切刀的更换....33
2. 电源保险丝的更换....34

Ⅵ.后备容器....34

Ⅰ. SPECIFICATIONS
规格

Type	2282N	2282N-7	Remarks
Stitch system	Standard zigzag		
Stitch diagram			
Max.sewing speed	5000(rpm)		Depending on the type of material and process
Max.needle throw	3(mm)		
Max.feeding amount	2.5 mm*Factory-set to 1.5 mm at the time of delivery		
Needle	SCHMETZ134SUK,438:#65 to #90,ORGAN DPx5:#9 to #14		
Cutting allowance	1.5(mm)		For straight stitching
Max.lift of the persser foot	10(mm)		7 mm for the presser foot provided with a wiper
Lubricating oil	No.15		

型号	2282N	2282N-7	备注
缝纫形式	标准曲折缝		
线迹显示			
最高转速	5000(rpm)		根据布料和工序
最大摆动宽度	3(mm)		
最大送布量	2.5(mm) *标准出货为1.5 mm		
使用机针	精密牌134 SUK，438：#65-#90，风琴牌DPx5：#9-#14		
切边宽度	1.5(mm)		直线缝纫时
最大压脚提升量	10(mm)		安装拨线杆时7 mm
使用机油	No. 15		

Ⅱ. INSTALLATION
安装

1.checking of setting the supply voltage
确认电源电压的设定

WARNING: * Be sure to set the supply voltage before installing the electrical box on the sewing machine table.
* Be sure to set the supply voltage before connecting the power cable to the power switch.
* Detach the power plug of the ewing machine from the receptacle before starting the work.

注意：* 请在缝纫机机台安装前进行.
* 打开电源开关之前，请连接好电源线.
* 请把缝纫机的电源插头从插座上拔下之后再进行设定.

(1) Checking the supply voltage established

Checking the supply voltage you have set against the supply voltage given on the supply voltage label adhered on the power cable of the electrical box.Make sure that the voltage matches the supply voltage to be actually used.

If the voltage dose not match the supply voltage to be actually used,see the next item"(2)Changing the supply voltage".

The supply voltage can be changed over among 100 V,200 V and 230 V.

(1) 电源电压的设定确认

电源电压标志在电气箱的电源线上. 请确认使用的电压是否符合要求. 如果不同时请参阅下面的[（2）电源电压设定的变更].

100 V,200 V,300 V 可以转换.

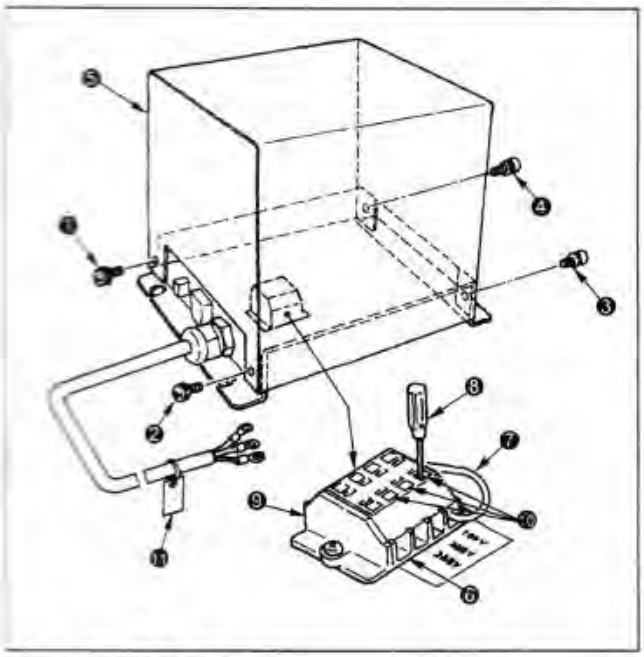

(2) Changing the supply voltage

If the supply voltage you have set does not match the supply voltage to be used,appropriately change the setting of the supply voltage.

1) Remove screws ❶ to ❹ shown in the illustration and detach cover ❺.
2) Pressing portion ❿ on terminal block ❻ with small slotted screwdriver ❽ ,draw out brown cord ❼.
3) Pressing portion ❿ corresponding to the supply voltage to be used with small slotted screwdriver ❽ ,insert brown cord ❼ into the ❽ supply voltage slot.Then,release the screwdriver from the portion.

Slightly pull brown cord ❼ to check to be sure that the cord will not come off.

4) Place cover ❺ and fix it with screws ❶ to ❹ .
5) Appropriately correct the indication of the supply voltage given on supply voltage label ⓫ .

(2) 电源电压的变更

如果使用的电源与设定电压不同时，请按照以下顺序变更设定.

1. 卸下图中 ❶ - ❹ 的螺丝，再卸下外罩 ❺.
2. 用小一字螺丝刀 ❽ 从上方向下按端子台 ❻ 上的 ❿ 部分，拔下绿色电线 ❼
3. 用小一字螺丝刀 ❽ 按下使用电压的 ❿ 部分，然后把绿色电线 ❼ 插进去，再拔下螺丝刀 ❽

请轻轻拉绿色电线 ❼，确认是否连接牢固拔不下来.

4. 盖上外罩 ❺，用螺丝 ❶ - ❹ 固定.
5. 请修正电压设定牌 ⓫ 上的表示.

2.Installing the electrical box
电器箱的安装

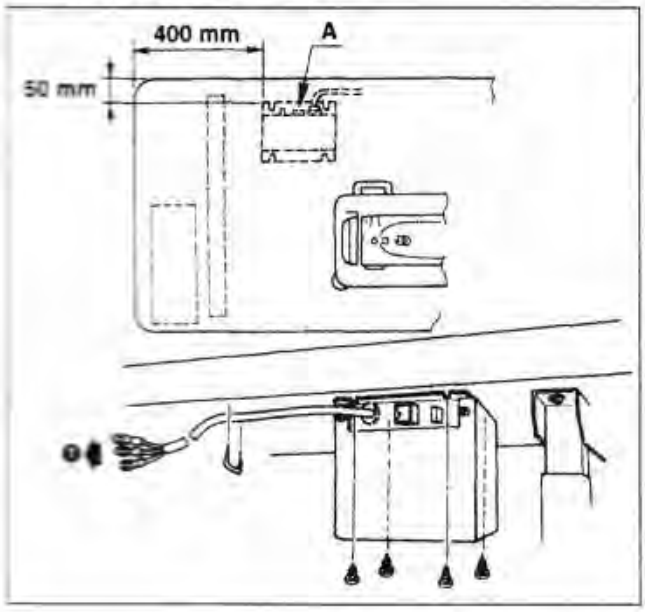

Fix the electrical box(MC-150) on the underside of the table at the location illustrated with four wood screws.At this time,position the electrical box so that power cable and the fuse box are placed on A side.Connect power cable ❶ to the power switch.

用木螺丝 (4) 处把电气箱 (MC-150) 固定到机台背面如图所示的位置. 此时请把电源线\保险丝箱连接到A侧.

❶ 连接电源开关.

3.Connecting the power cable
电源线的连接

WARNING:
Be sure to connect the power cable with the power plug removed from the receptacle.

注意:
请一定把电源插座插头从插座上拔下之后再连接.

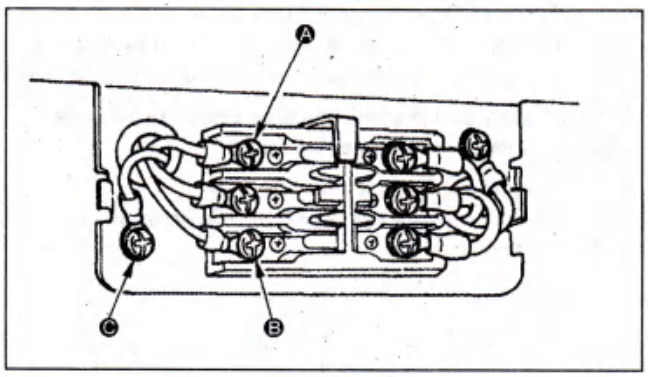

1) Detach the cover of the power switch for sewing machine motor.
2) The power cable coming from the electrical box contains three different cords.Connect the brown cord to portion Ⓐ ,light blue cord to portion Ⓑ and green/yellow cord to portion Ⓒ (FG) of the power switch.

1) 卸下缝纫机马达用的电源开关.
2) 把从电气箱出来的褐色电源线连接到电源开关的Ⓐ部，把天蓝色线连接到Ⓑ部，把绿色/黄色电线连接到Ⓒ部(FG).
3) 安装上电源开关外罩.

4.Connecting the cords
电线的连接

WARNING:
Be sure to connect the power cable with the power plug removed from the receptacle.

注意:
请一定把电源插座插头从插座上拔下之后再连接.

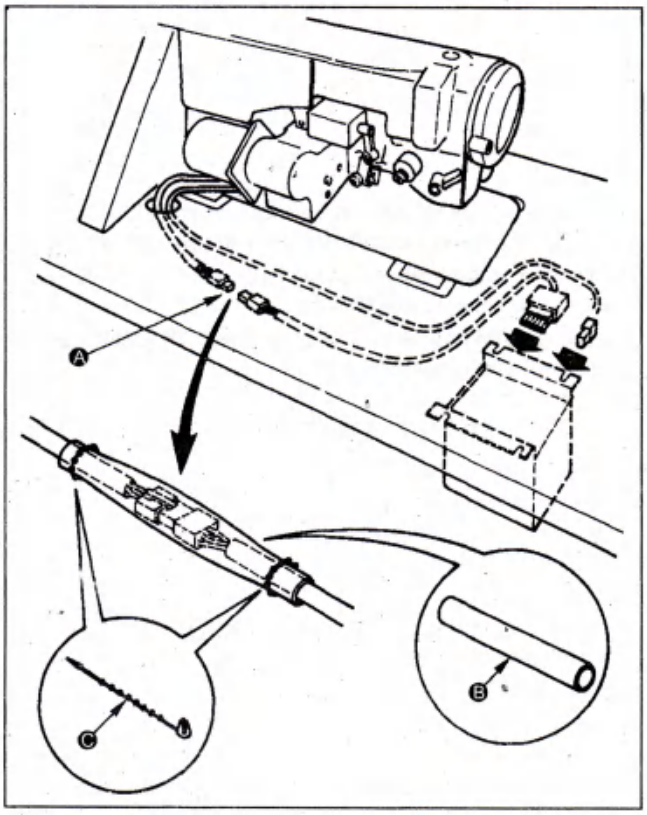

Connect the cords coming form the machine head to the electrical box (MX-150).THE 6P cord requires a junction cord.Put tube Ⓑ supplied with the machine as an accessory over connected portion Ⓐ ot the junction cord and fix both ends of the tube Ⓑ with two bead bands Ⓒ with the connector inside the tube placed at the center of the tube to secure safety.

把从机头来的电线连接到电气箱(MC-150). 6P的电缆使用接线电缆，但是为了保证接线电缆连接部Ⓐ的安全，请插入附属品软管Ⓑ，把接头弄到软管Ⓑ的中央，然后用附属品扎线带(2个)Ⓒ固定好软管的两端.

Ⅲ.PERPARATION OF THE MACHINE
缝纫机的准备

1.Changing the knife height
切刀高度的调整

WARNING:
Turning ON the power switch with the foot pedal depressed is very dangerous since the knife operation.
Do not place your foot or anything on the foot pedal when truning ON the power switch,

注意:
踩住踏板打开电源的话，切刀会动作，非常危险.
打开电源的时候，请不要把脚放在踏板上.

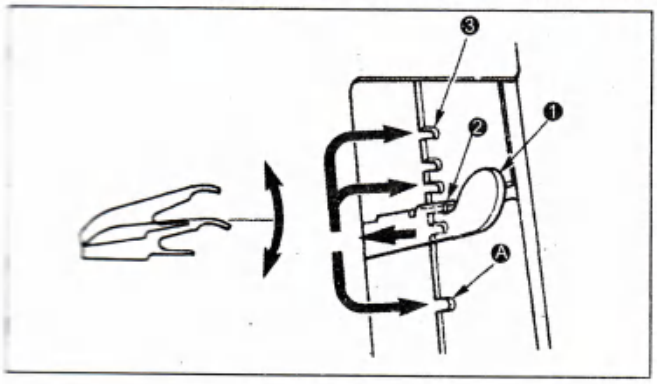

1) Lightly press knife adjusting lever ❶ to the left until clwa ❷of the lever comes off notch ❸ .
2) Adjust the height of the knife by shifting the lever up or down. The knife height will be increase by shifting the lever up or decreased by shifting it down.

In the case where the lever is set in notch Ⓐ, the knife height will be 0 (zero) and the knife driving motor switch will be turned off.

1) 把切刀调节杆 ❶ 轻轻往左按，把拨杆爪 ❷ 从缺口 ❸ 上卸下来.
2) 上下移动拨杆，向上移动拨杆切刀高度变大，向下移动拨杆切刀高度变小.

设定到缺口 Ⓐ 部后，切刀高度为0，切刀驱动马达开关关闭(OFF).

2.Adjusting the knife perssure
切刀压力的调整

WARNING:
To avoid possible personal injury due to abrupt start of the machine,turn off the power to the machine and check to be sure that motor has totally stopped rotating in prior.

注意:
为了防止突然启动造成人身事故，请关掉电源，确认马达停止后转动后再进行.

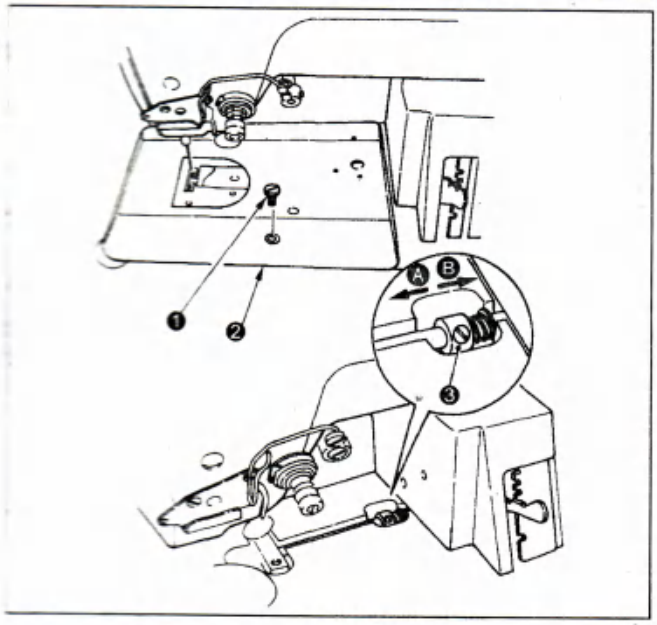

1) Loosen setscrew ❶ and detach bed plate ❷.
2) Loosen the screw in thrust pad❸ and shift the thrust pad in direction Ⓐ to decrease the knife pressure or in direction Ⓑ to increase it.The standard position of the thrust pad is the center of the groove.

In the case where the knife pressure is increase,the sharpnes of the knife will be enhanced,however,the service life of the knife can be shortened.

1) 拧松 ❶ 的固定螺丝，把机台板 ❷ 卸下来.
2) 拧松滑块 ❸ 螺丝，向 Ⓐ 方向移动切换到压力变小，向 Ⓑ 方向移动切刀压力变大.
标准位置的滑块的槽的中央位置.

切刀压力大切的快，但是切刀寿命变短.

3.Adjusting the installation of the knife start switch
切刀启动开关的安装调整

WARNING:
To avoid possible personal injury due to abrupt start of the machine,turn off the power to the machine and check to be sure that the motor has totally stopped rotating in prior.

注意:
为了防止突然启动造成人身事故，请关掉电源，确认马达确实停止转动后再进行.

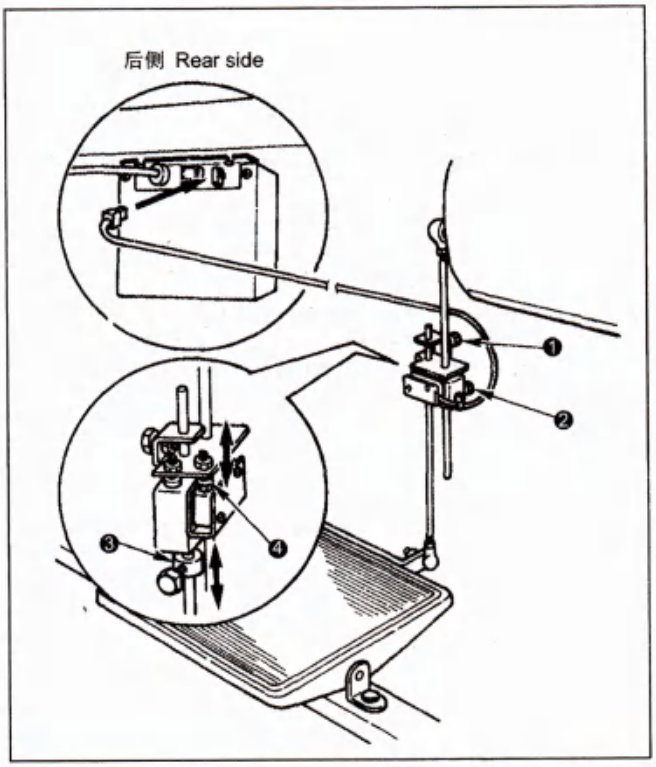

Attach the knife start switch(asm.) to the portion locating between the lever of the electrical box for the sewing machine and the pedal At this time,try to position the start switch(asm.) so that the connecting rod is vertical.
Connect the switch cord to the MC-150.Adjust the height and inclinatio of the pedal using screws ❶ and ❷ .Adjust the depressing depth of the pedal by shifting stopper ❸ up or down.Adjust the sensitivity of the knife start switch by shifting stopper ❹ up or down.At this time,be careful so that stopper ❹ does not come in contact with the knife start switch main nuit.

把启动开关(组件)安装到缝纫机马达用电气箱的拨杆和踏板之间，此时，尽量让连接杆垂直. 开关的电源插进MC-150.
踏板的高度和倾斜的调整用 ❶ 和 ❷ 的螺丝进行. 踏板的踩下量的调整请把挡块 ❸ 上下移动来调整.
启动开关的灵感度是通过上下移动上下移动挡块 ❹ 来调整的. 调整时请注意不要让挡块 ❹ 碰到启动开关本身.

Ⅳ.PEDAL OPERATION
踏板操作

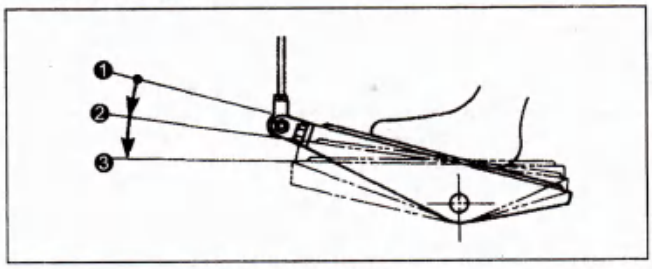

❶ 这是踏板的中立位置，缝纫机和切刀均停止.

❷ 从中立位置向前踏板，切刀开始动作.

❸ 切刀开始动作之后，再往前踩踏板，缝纫机开始动作.

缝纫结束时，为与上述相反方向 ❸ → ❷ → ❶ ，缝纫机低速←→高速转动、自动切线等操作与一般缝纫机相同.

❶ This is the neutral position of the pedal at which both the sewing machine and the knife are at rest.

❷ Slightly depress the front part of the pedal from the neutral position ,and the knife will actuate.

❸ Further depress the front part of the pedal from the position at which the knife has actuated,the sewing machine will start.

At the end of sewing,follow the aforementioned steps ❸ to ❶ in the reverse order.
Follow the same steps with the conventional LJ models to change over the sewing speed of the machine between the low-speed and the high-speed or to actuate the automatic thread trimmer.

V .MAINTENANCE
维修

1.Replacing the knives
切刀的更换

WARNING:
To avoid possible personal injury due to abrupt start of the machine,turn off the power to the machine and check to be sure that the motor has totally stopped rotating in prior.

注意:
为了防止突然启动造成人身事故，请关掉电源，确认马达确实停止转动后再进行.

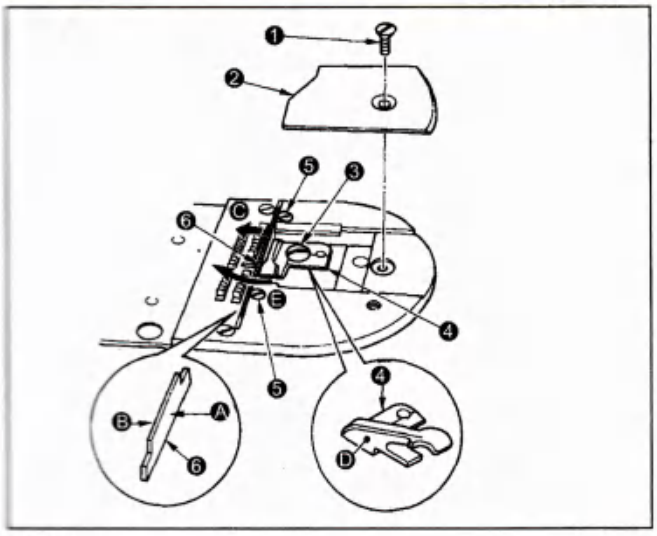

<Removal>

1) Follow the steps of procedure given in III-2 to set the knife pressure to 0(zero).
2) Loosen setscrew ❶ and detach knife cover ❷.
3) Loosen setscrew ❸ ,and cloth cutting knife ❹ will come off.
4) Loosen two setscrews ❺ ,and throat plate knife ❻ will come off.

Throat plate knife ❻ is a double-sided(Ⓐ and Ⓑ) knife.

<Installation>

1) Pressing throat plate knife ❻ in direction Ⓒ,tighten setscrews ❺.
2) Fix cloth cutting knife ❹ using setscrew ❸ so that its surface Ⓓ is in parallel to throat plate knife ❻.To enhance sharpness,tilt cloth cutting knife ❹ slightly to direction Ⓔ .It should be remembered, however,the excessively tilted knife can wear easily.
3) Attach knife cover ❷ in position and appropriately adjust the knife pressure.

<拆卸>

1) 按照III-2项的顺序，把切刀压力设为0.
2) 拧松固定螺丝 ❶，拆下切刀外罩❷.
3) 拧松固定螺丝 ❸，切布道 ❹.
4) 拧松固定螺丝 ❺(2个)，针板刀 ❻ 可以拆卸.

针板刀 ❻ 两面(Ⓐ，Ⓑ),可以使用.

<安装>

1) 把切布刀 ❻ 往Ⓒ方向按，拧紧固定螺丝 ❺.
2) 把切布刀 ❹ 的 Ⓓ面调整得与针板刀 ❻ 平行，然后用固定螺钉❸固定. 如果要让切刀时切布紧，请把切布刀❹ 请稍稍向 Ⓔ 布倾斜. 倾斜过大的话，切刀的损坏变的厉害.
3) 安装上切刀外罩 ❷ ，调整切刀压力.

2.Replacing the power fuse
电源保险丝的更换

WARNING:
To prevent personal injuries caused by electric shock hazards or abrupt start of the sewing machine,carry out the work after turning OFF the power switch and ascertaining that the motor has completely stopped.To prevent personal injuries,when a fuse has blown out,be sure to replace it with a new one with the same capacity after turning OFF the power switch and removing the cause of the blown-out of the fuse.

注意:
为了防止触电、意外的启动造成的事故，请关掉电源，确认马达确实停止转动后再进行. 为了防止人身事故，保险丝断后，请一定要关掉电源排除掉保险丝烧断的原因之后，再更换成相同容量的保险丝.

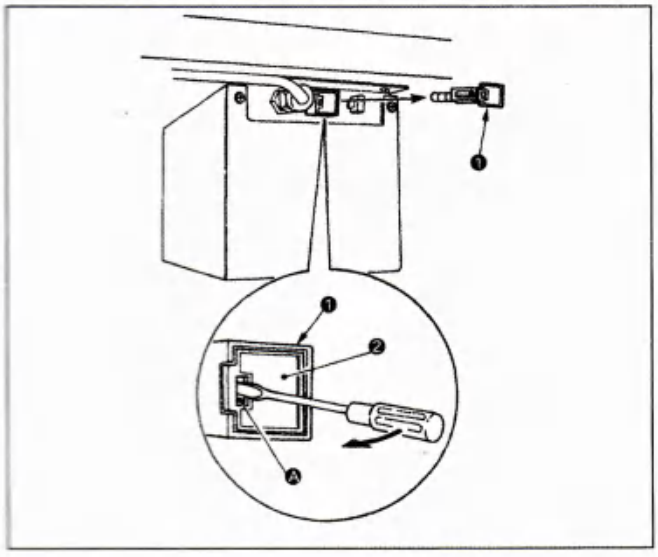

1) To remove cap ❷ from fuse holder ❶ ,insert a slotted screwdriver into slit Ⓐ and move the screwdriver in the direction of the arrow shown in the illustration.

Do not move the screwdriver excessively but move it lightly.

2) Replace the fuse with a new one and press in the fuse until cap ❷ is locked.

Fuse to be used:1.6 A,250 V

1) 把一字螺丝刀插进槽 Ⓐ，沿图的箭头方向转动，从保险丝架❶夹簧的形状 ❷.

转动螺丝刀时，请轻轻的转动，不要用过强的力量.

2) 更换完的新的保险丝后，把盖子 ❷ 盖好.
使用保险丝：1. 6A ，250v

VI.SPARE PARTS
备用零件

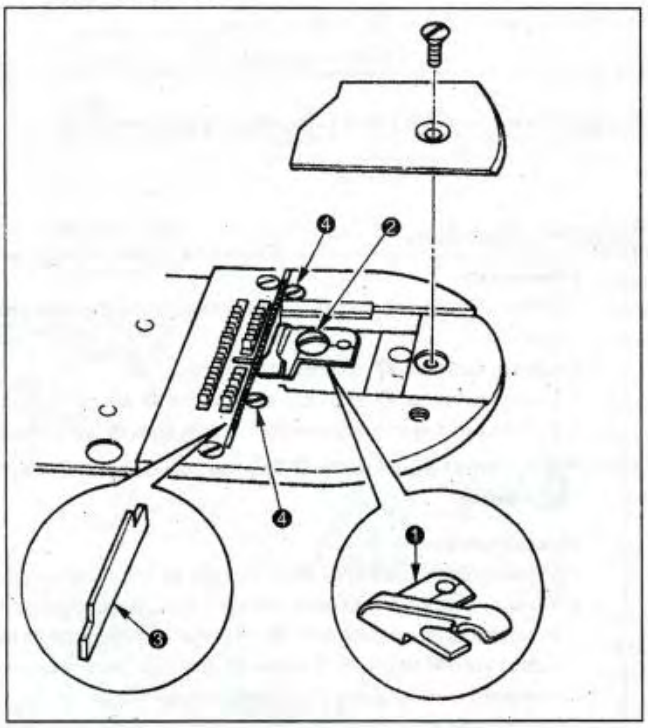

❶ Parts No./货号:23506009

❷ Parts No./货号:SS5090610SP

❸ Parts No./货号:23506108

❹ Parts No./货号:SS6080360SP

2280NU,2280NU-7
2286NU,2286NU-7
2288NU,2288NU-7

High-speed,1-needle,Lockstitch,Zigzag Stitching Machine with an Material Slippage Preventing Function

高速单针平缝曲折缝缝纫机（带防止布偏斜功能）

CAUTION:
Instructions described in these pages are for 2280NU series only.
Instructions other than those described there are the same as those for 2280N series.
注意:
本书只记述有关2280NU系列的说明，本书以外的有关项目与2280N系列相同.

1.SPECIFICATIONS
规格

	2280NU(-7)	2286NU(-7)	2288NU(-7)
Type of zigzag	Standard zigzag	3-step zigzag	cam-replacement type zigzag
Stitch diagram			Standard zigzag to scallop,etc.by means of pattern cam
Sewing speed	Max.4,500 rpm		
Max.zigzag width	5 mm	10mm(Standard 8 at the time of delivery)	8mm(Standard zigzag:6mm)
Max.zigzag length	2.5mm	2mm	
Needle	SCHMETZ 134SUK,438; #65 to #90,DP *5; #9 to #14		
Lift of the presser foot	By the hand lifter 5.5 mm,by the knee lifter 10mm		
oil used	New Defrix oil No.1		

	2280NU(-7)	2286NU(-7)	2288NU(-7)
缝纫形式	标准2点曲折缝	4点曲折缝	凸轮更换式
线迹图示			更换花样凸轮，可变换2点一荷叶边等
缝纫速度	Max. 4, 5000 rpm		
最大摆动幅度	5mm	10 mm(标准出货为 8mm)	8 mm(2点时为 6mm)
最大针迹长度	2. 5mm	2mm	
使用机针	精密牌134 SUK，438：#65-#90，DPx5：#9-#14		
压脚高度(膝动提升)	挑线杆时5. 5mm，膝动提升时10mm		
使用机油	No. 1 新机油		

2.HEIGHT AND INCLINATION OF THE NEED DOG
送布牙的高度、倾斜

WARNING:
To avoid possible personal injury due to abrupt start of the machine,turn off the power to the machine and check to be sure that the motor has totally stopped rotating in prior.
注意:
为了防止突然启动造成人身事故，请关掉电源，请确认马达确实停止转动后再运行。

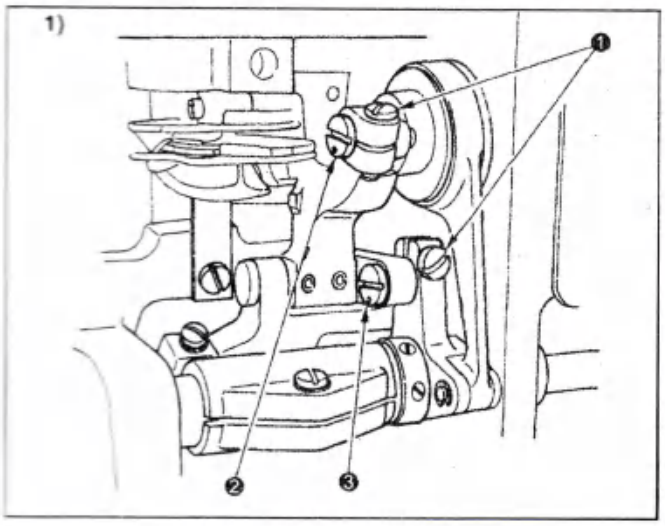

1) To adjust the height and inclination of the feed dog,loosen setscrew ❶ in the feed driving link pin in the figure,and turn feed driving link pins ❷and ❸ suing a screwdriver.
2) Standard inclination fo the feed dog is the position where the engraved dot of feed driveing link pin ❷ is in the direction of 9 o'clock,and the engraved dot fo feed driving link pin ❸ is in the direction of 9 o'clock.
3) Standard height of the feed dog is 1.4mm.
4) To adjust the cloth-slip,mainly adjust feed driving link pin ❸ .The cloth-slip can be corrected in accordance with the amount of inclined angel "θ" of the feed dog.
5) The sewing machine equipped with the thread trimmer only has been factory-set a spacer in between the throat plate and the feed dog.

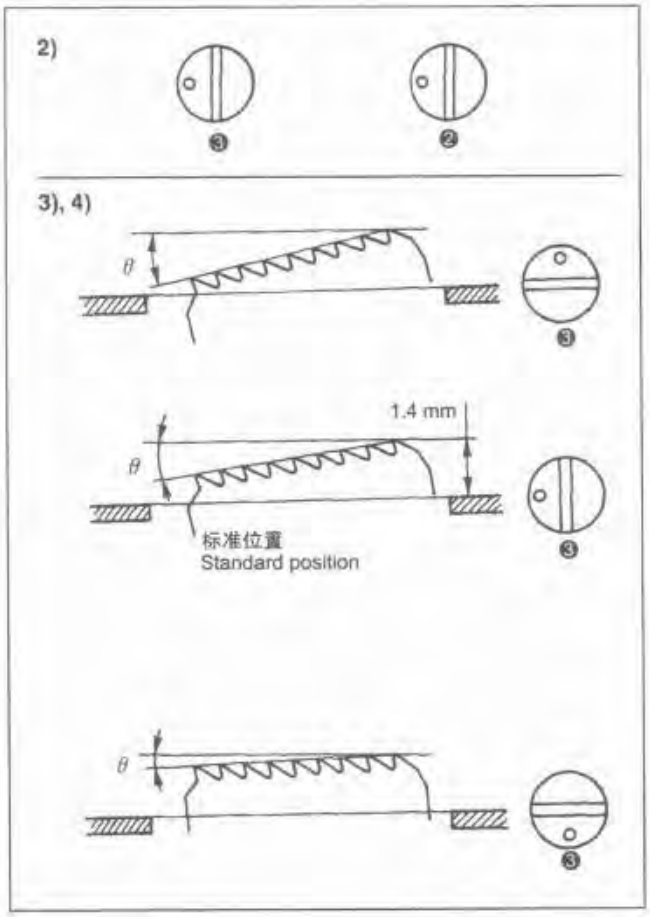

1) 调整送布牙的高度和倾斜时，请拧松图上所示的上下送布环轴固定螺丝 ❶ ，再用螺丝刀转动上下送布环轴 ❷、❸.
2) 标准的倾斜是上下送布环轴 ❷ 的刻点为钟表9时的方向，上下送布环轴 ❸ 的刻点为钟表9时的方向.
3) 送布牙高度的标准是1. 4mm.
4) 调整布跑偏时，请上下送布环轴 ❸ 为主进行调整. 调整送布牙倾斜角的大小，可以修正布跑偏.
5) 只有带切线的缝纫机可以在针板和送布牙之间安装垫片.

2284N,2284N-7
2284NU,2284NU-7

High-speed,1-needle,Lockstitch,Zigzag Stitching Machine with Standard Zigzag/ 3-step Zigzag Pattern Changeover Function

高速单针平缝曲折缝缝纫机（带2点、4点图案转换功能）

CAUTION:
Instructions described in these pages are for 2284N series only.
Instructions other than those described there are the same as those for 2280N/2280NU series.

注意:
本书只记述有关2284N系列的说明，本书以外的有关项目与2280N/2280NU系列相同.

1.SPECIFICATIONS
规格

Model	2284N 2284N-7	2284NU 2284NU-7
Type of zigzag	Standard zigzag/3-step zigzag	
Stitch diagram		
Max sewing speed	5,000 rpm*1	4,500 rpm*2
Max needle throw	10 mm(Factory-set to 8 mm at the time of delivery)	
Max feeding amount	2.5 mm(3-step zigzag:2mm)	
Needle	SCHMETZ 134 SUK,438:#65 to #90,ORGAN DPx5:#9 to #14	
Lift of the presser foot	By the hand lifter 5.5 mm,by the knee lifter 10 mm	
Lubricating oil	No.15	

* 1:Type and max. sewing speed depending on zigzag width conform to Table 1.
* 2:Standared zigzag exceeding zigzag width of 6 mm or more and 3-step zigzag exceeding needle throw of 8 mm or more conform to Table 1.

Table 1

Model	2284N(-7)		2284NU(-7)	
Stitch diagram / Zigzag width				
0 to 5 mm	5,000 rpm	5,000 rpm	4,500 rpm	4,500 rpm
6 mm	4,500 rpm	5,000 rpm	4,500 rpm	4,500 rpm
Over 6 mm to 8 mm	4,000 rpm	5,000 rpm	4,000 rpm	4,500 rpm
Over 8 mm to 10 mm	3,000 rpm	4,000 rpm	3,000 rpm	4,000 rpm

形 式	2284N 2284N-7	2284NU 2284NU-7
线迹形式	标准2点曲折缝/4点曲折缝	
线迹图示		
最高转速	5,000 rpm * 1	4,500 rpm * 2
最大摆动幅度	10 mm(标准出货为8 mm)	
最大送布量	2.5 mm(4点曲折缝为2 mm)	
使用机针	精密牌 134 SUK，438：#65-#90，风琴牌DPx5:#9-#14	
压脚高度	挑线杆时5.5 mm,膝动提升时10 mm	
使用机油	No.15	

* 1.不同缝纫形式和摆动宽度的最高转速如表1所示.
* 2.摆动宽度超过6 mm以上的2点曲折缝、超过8 mm的4点曲折缝如表1所示.

表1

形式	2284N(-7)		2284NU(-7)	
线迹图 / 摆动宽度				
0-5 mm	5,000 rpm	5,000 rpm	4,500 rpm	4,500 rpm
6 mm	4,500 rpm	5,000 rpm	4,500 rpm	4,500 rpm
6 mm址上-8 mm	4,000 rpm	5,000 rpm	4,000 rpm	4,500 rpm
8 mm址上-10 mm	3,000 rpm	4,000 rpm	3,000 rpm	4,000 rpm

2.CHANGEOVER OF STANDARD ZIGZAG/3-STEP ZIGZAG

2点曲折缝/4点曲折缝

WARNING:
To avoid possible personal injury due to abrupt start of the machine,turn off the power to the machine and check to be sure that the motor has totally stopped rotating in prior.

注意：
为了防止突然启动造成人身事故，请关掉电源，请确认马达确实停止转动后再运行。

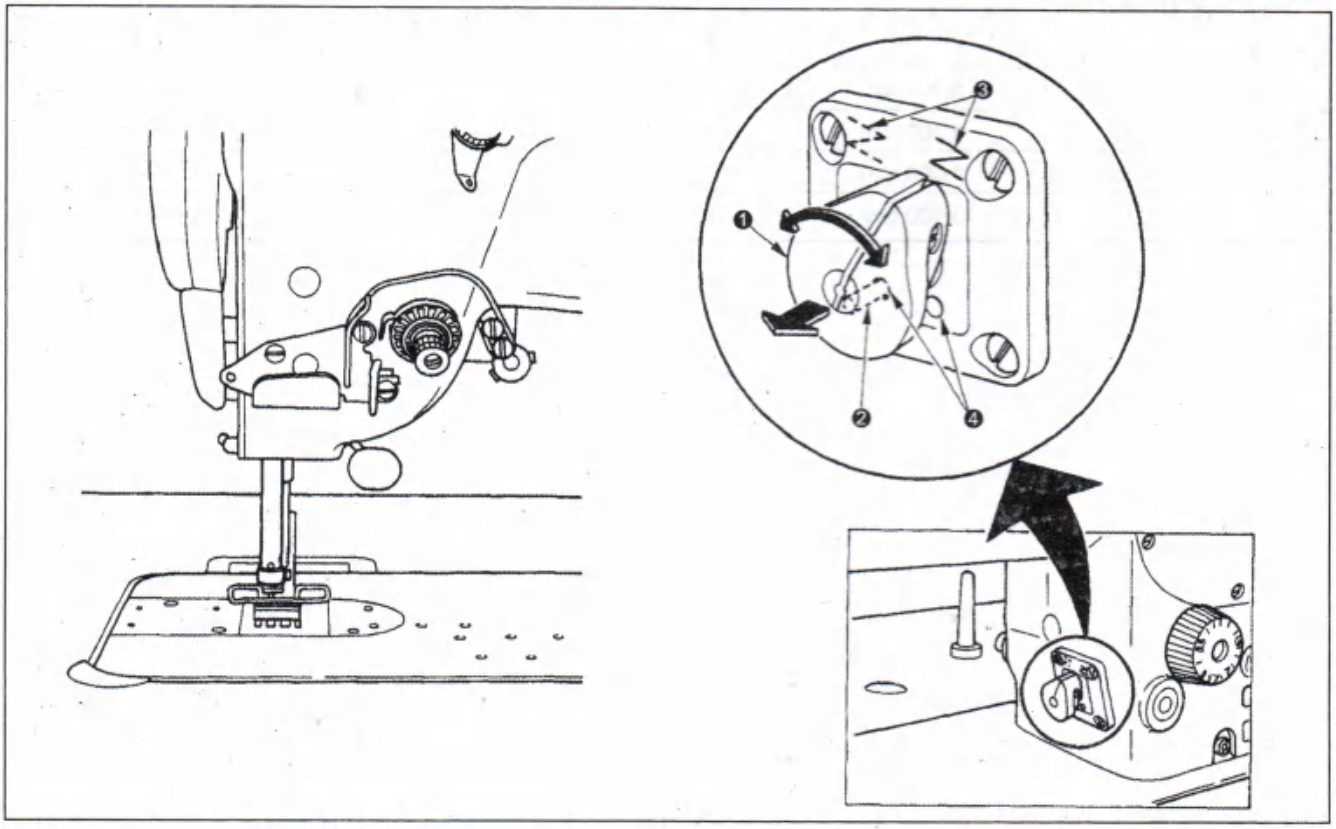

In principle,the changeover point can be obtained in the ratio of one time to three stitches.

1) Turn handwheel by hand to bring needle to its lowest position.
2) Pull changeover lever ❶ toward this side and pull out lock pin ❷ from positioning hole ❹.
3) Turn changeover lever ❶ while pulling it and adjust it to zigzag mark ❸ you desire.At this time,securely place lock pin ❷ in positioning hole ❹ and set it.

Make sure that lock pin ❷ is securely placed in positioning hole ❹ .

In addition,never operate the sewing machine in the state that lock pin ❷ is not placed in positioning hole ❹ (on the way of changeover).
It will cause the trouble of the sewing machine.

4) When changeover lever ❶ cannot be turned,perform again the work of steps 1) to 3) after manually turning the handwheel by one turn(360°).Perform repeatedly until changeover work can be completed.

基本的转换点可以以1次3针的比例进行转换.

1) 用手转动皮带轮，把机针降到最下方.
2) 把转换拨杆 ❶ 拉到面前，把锁定销 ❷ 从定位孔 ❹ 拔出来.
3) 拉出转换拨杆 ❶ 转动，对准希望的曲折缝标记 ❸ 此时，把锁定销 ❷ 确实的插到定位孔 ❹ 中.

请确认锁定销 ❷ 不能转动时，确实地插到定位孔 ❹ 中.
另外，软固 ❷ 没有进入到定位孔 ❹ 的情况(转换途中)时，请绝对不要让缝纫机转动.如果缝纫机转动了有可能发生故障.

4) 转动拨杆 ❶ 不能转动时，用手转动皮带轮1圈(360°)之后再按1)-3)步骤进行操作.反复进行直至可以进行转换操作.

2284C-7

High-speed,Cylinder-bed,1-needle,Lockstitch,Zigzag Stitch Machine with Standard Zigzag/3-step Zigzag Pattern Changeover Function

高速柱型机头单针平缝曲折缝缝纫机(带2点/4点图案转换功能)

CAUTION:
Instructions described in these pages are for 2284C-7 only.Instructions other than those described there are the same as those for 2280N/2280NU or 2284N/2284NU.

注意:
本书只记述有关2284C-7系列的说明.本书以外的有关项目,2280N/2280NU系列和2284N/2284NU相同.

CONTENTS

Ⅰ.SPECIFICATIONS....41
Ⅱ.INSTALLATION....41
1.Replacing the control box cover setscrews....41
2.Fixing the power cable....41
3.Fixing the hinge of the machine head....42
4.Installing the hook cover guide stopper....42
5.Adjusting the level adjuster....42
Ⅲ. OPERATING PROCEDURE....43
1.Changeover of standard zigzag/3-step zigzag....43
43 2.How to open the hook cover....43
Ⅳ.MAINTENANCE....43
1.Remove the hook cover....43
2.Adjusting clearance between the hook cover and the machine bed....44
3.Adjusting the amount of oil in the hook....44
4.Height and inclination of the feed dog....45
5.When replacing the hook cover guide pin....46
Ⅴ.SEWING MACHINE TABLE....46
1.When making the table....47
2.When making the auxiliary table....48

目 录

Ⅰ.规格....41
Ⅱ.安装....41
1. 控制箱护罩螺丝更换....41
2. 电源线的固定....41
3. 缝纫机头铰链的固定....42
4. 旋梭护罩导向止动器的安装....42
5. 水平调节器的调整....42
Ⅲ.使用方法....43
1. 2点曲折/4点曲折的装换转换....43
2. 旋梭护罩的打开方法....43
Ⅳ.维修保养....43
1. 旋梭护罩的拆卸方法....43
2. 旋梭护罩的机台间隙调整....44
3. 旋梭油量调整....44
4. 送布牙的高度和倾斜度....45
5. 更换旋梭护罩导向销时....46
Ⅳ.关于缝纫机机台....46
1. 制作机台时....47
2. 制作辅助机台时....48

Ⅰ.SPECIFICATIONS
规格

Specifications are the same as those for 2284N-7. see p.
规格与 2284N-7相同，请参照　　页.

Ⅱ.INSTALLATION
安装

1.Replacing the comtrol box cover setscrews
控制箱护罩固定螺丝的更换

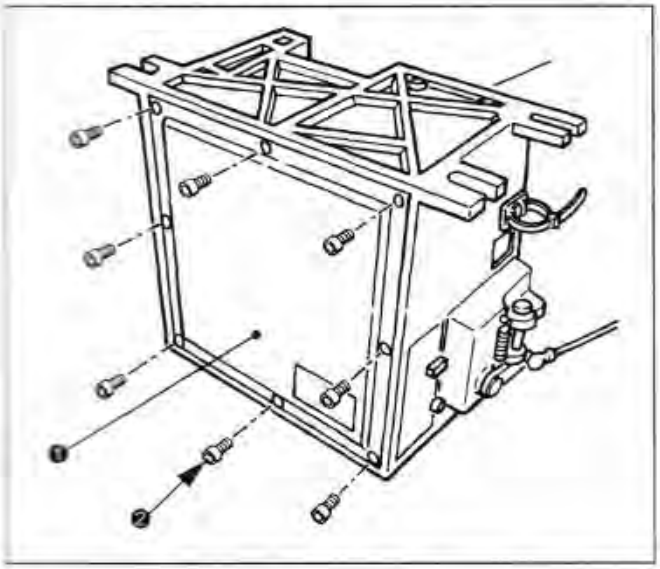

when installing control box(SC-800) ❶ on the proper exclusive table /stand,it is not possible to remove control box cover setscrews ❷ . Replace 8 setscrews shown in the figure with hexagon sochet head bolts which have been supplied as accessories with the machine head before installing the control box on the table/stand.

把控制箱(SC-800) ❶ 安装到专用台板时，护罩的固定螺丝 ❷ 拆卸不了.
安装到脚桌之前，请把图中的6个螺栓更换成附属品的六角孔螺栓.

2.Fixing the power cable
电源线的固定

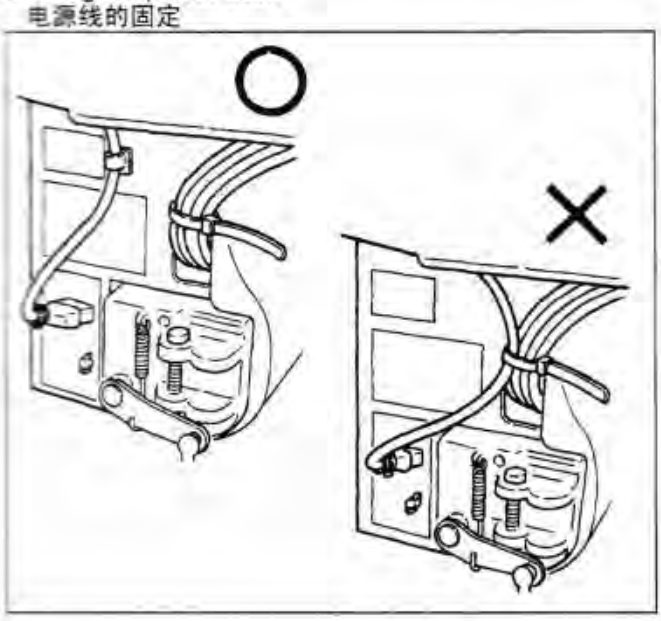

Fix the power cable to the control box with the nylon clamp which has been supplied as accessories with the machine head since it is dangerous when the power cable protrudes from the table/stand.

Do not bundle the power cable with other cables. Malfunction will be caused.

电源线从脚桌里露出来的话，十分危险，因此请用机头附属品的尼龙夹固定到控制想上.

请不要把电源线和其他电缆线捆扎到一起.以免发生误动作.

3.Fixing the hinge of the machine head
缝纫机头铰链的固定

WARNING:
To avoid possible personal injury due to abrupt start of the machine,turn off the power to the machine and check to be sure that the motor has totally stopped rotating in prior.

注意:
为了防止突然启动造成人身事故，请关掉电源，请确认马达确实停止转动后再运行。

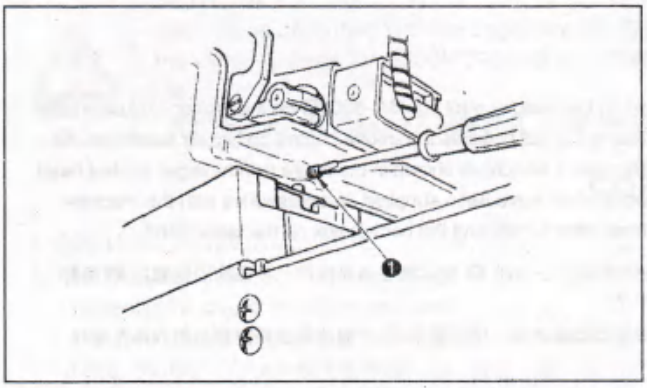

1) Tilt the machine head after attaching the hinges to the machine head and putting the machine head on the table.
2) Fix the hinge located to the face plate side with setscrew(L=4.5)\ ❶ which has been supplied as accessorv.

1) 把铰链安装到机头，放到机台上，然后再放倒机头.
2) 用附属的固定螺丝 (L=4. 5) ❶ 固定靠近面部的铰链.

4.Installing the hook cover guide stopper
旋梭护罩导向止动器的安装

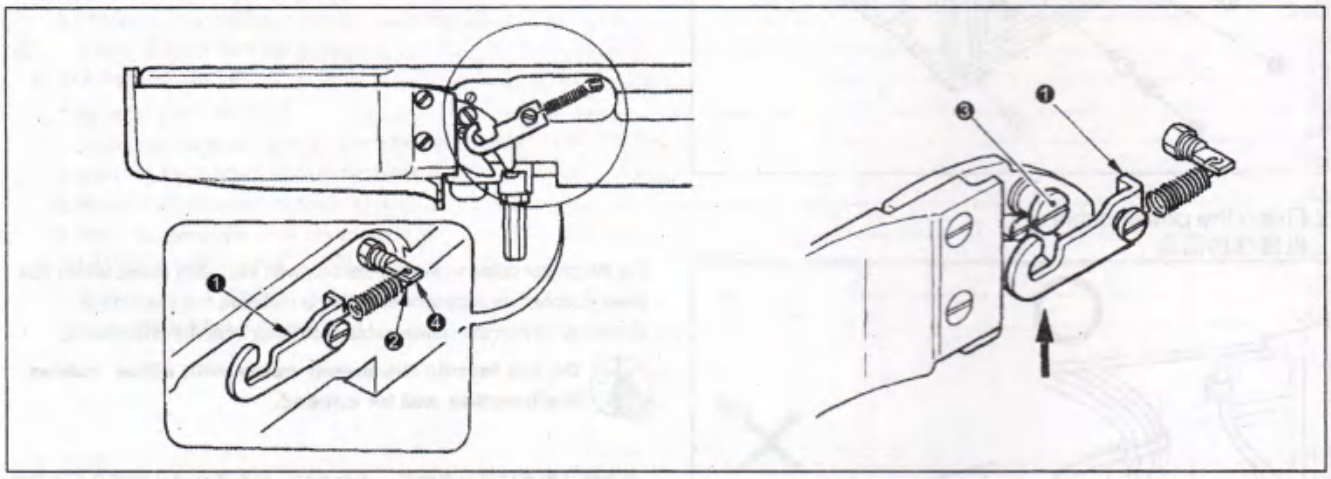

1) Put hook section ❷ of the spring of hook cover guide stopper ❶ supplied as accssories to spring rack ❹.
2) Insert notch of hook cover guide stopper ❶ from the under side upward to hinge screw ❸ to complete the installation.

1) 附属品中的旋梭护罩导向止动器 ❶ 的弹簧钩 ❷ 挂到弹簧座 ❹ 上.
2) 把旋梭护罩导向止动器 ❶ 的缺口部从下侧向上镶嵌到平头螺丝 ❸ 上，全部安装结束.

5.Adjusting the lever adjuster
水平调节器的调整

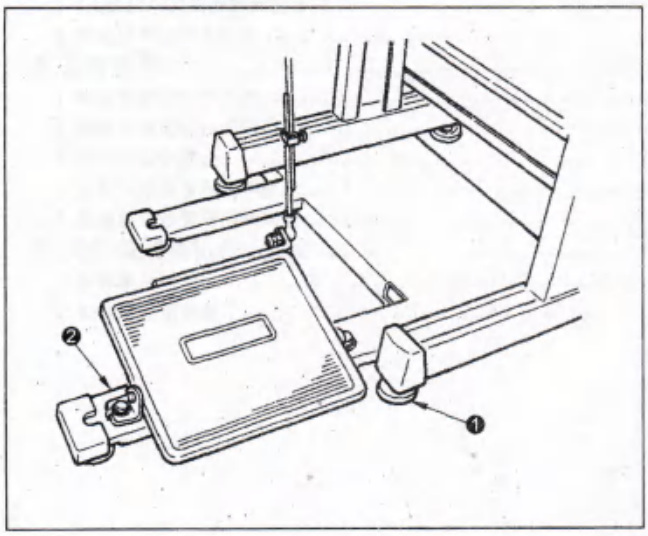

When using proper exclusive table/stand,fully perform the adjustment of the height of level adjusters(6 places) ❶ so that vibration or torsion of the whole table/stand does not become large.
In addition, take care not to apply a load to the top end of pedal support base ❷ in case off moving or the like.It may be bent.

使用专用台板时，请充分的调节水平调节器(6处) ❶ 的高度，以避免振动或倾斜. 另外，移动时，请注意不要在踏板支架 ❷ 的前端放置物品，有可能发生弯曲变形.

Ⅲ.OPERATING PROCEDURE
使用方法

1. Changeover of standard zigzag/3-step zigzag
1.点曲折/4点曲折的转换

Operating procedure is the same as that for 2284(-7).See p.
操作方法与2284(-7)相同. 请参照　　页.

2. How to open the hook cover
旋梭护罩的打开方法

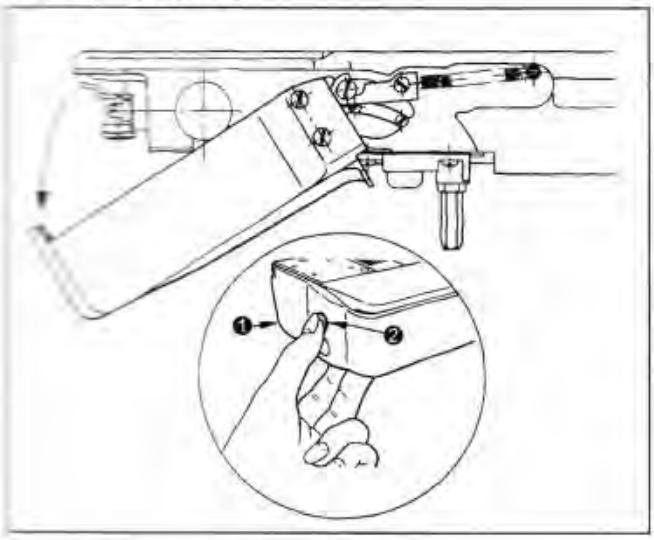

Putting your finger in the hollow of the bottom of hook cover ❶ ,press button ❷ to open the hook cover downward.

- **Do not press the hook cover ❶ from the upper side in the state that the hook cover ❶ is opened .Guide metal fittings may be broken.**
- **Periodically clean the inside of the hook cover ❶ so that it is not covered with material dust or the like.Troubles such as material dust is rolled in the hook and the like will occur.**

用手指按着旋梭护罩 ❶ 底部的凹部，按按钮 ❷，向下侧打开.

在打开旋梭护罩 ❶ 的状态，请不要从上方按压旋梭护罩 ❶ 有可能损坏导向金属部件.
旋梭护罩 ❶ 内部，应定期的进行清扫，不要堆积布屑灰尘.布屑积到旋梭里的话，会发生故障.

Ⅳ.MAINTENANCE
维修保养

1. Removing the hook cover
旋梭护套的拆卸方法

WARNING:
To avoid possible personal injury due to abrupt start of the machine,turn off the power to the machine and check to be sure that the motor has totally stopped rotating in prior.
注意:
为了防止突然启动造成人身事故，请关掉电源，请确认马达确实停止转动后再运行。

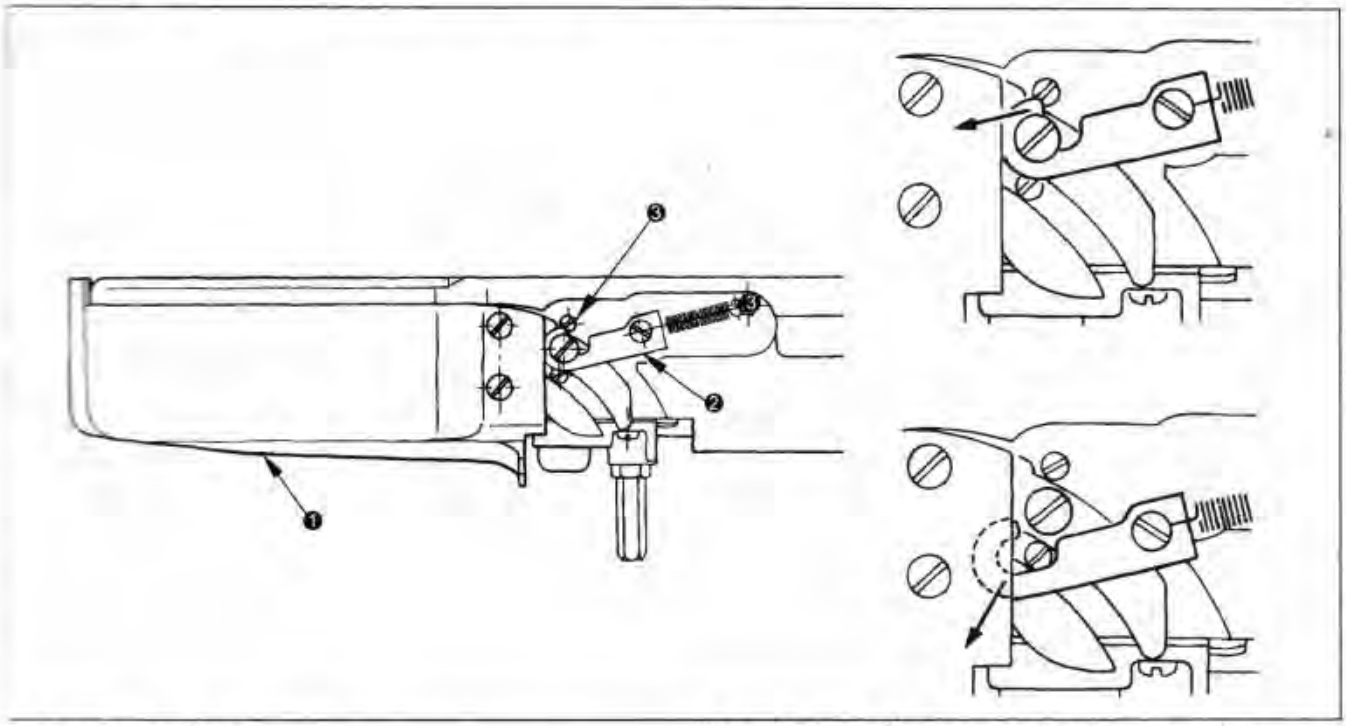

1) Tilt the machine head.
2) Remove the hook section of hook cover guide stopper ❷ the state that hook cover ❶ is closed.
3) Open hook cover ❶ to remove it from the sewing machine.
4) After removing hook cover ❶,put the hook section of hook cover guide stopper ❷ to hook cover guide stopper pin ❸.

1) 放倒机头.

2) 在关闭旋梭护套 ❶ 的状态，卸下旋梭护罩导向止动器 ❷ 的钩部.

1) 打开旋梭护罩 ❶ 之后，可以从缝纫机卸下旋梭防护罩.

1) 卸下旋梭护罩 ❶ 之后，请挂到旋梭护罩导向止动器 ❷ 的挂钩部和旋梭护罩导向器销 ❸ 上.

2.Adjusting clearance between the hook cover and the machine bed
旋梭护罩和机台的间隙调整

WARNING:

To avoid possible personal injury due to abrupt start of the machine,turn off the power to the machine and check to be sure that the motor has totally stopped rotating in prior.

注意:

为了防止突然启动造成人身事故，请关掉电源，请确认马达确实停止转动后再运行。

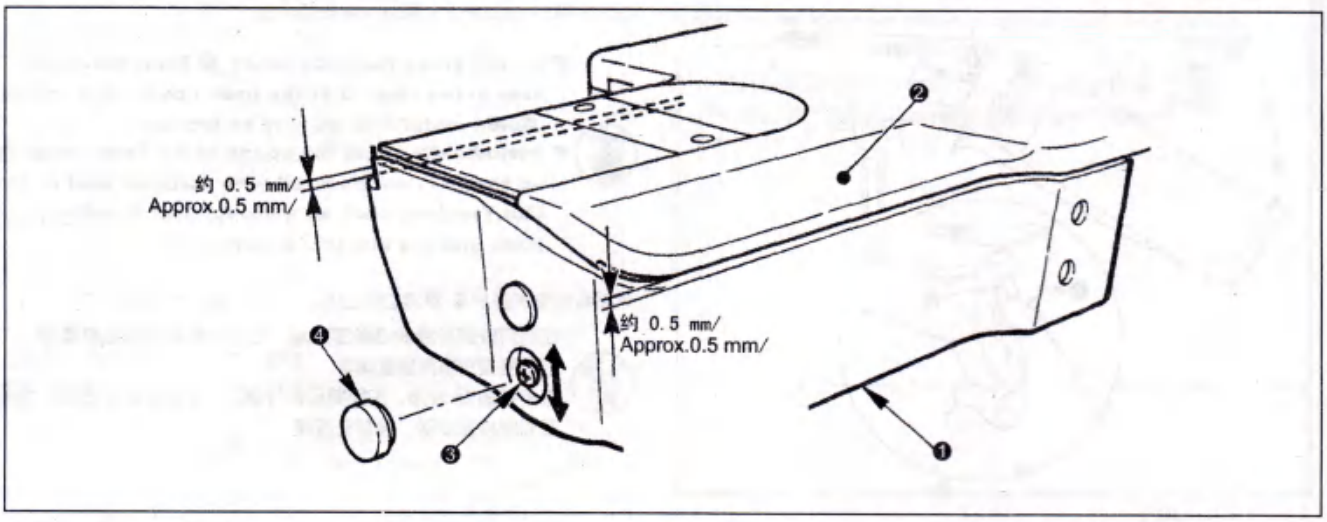

1) Remove rubber plug ❹.

2) Move setscrew ❸ up or down to adjust so that the clearance between hook cover ❶ and machine bed ❷ is approximately 0.5 mm.Then fix the setscrew.

1) 卸下橡胶栓 ❹.

1) 上下移动固定螺丝 ❸，把旋梭护罩 ❶ 和机台❷的间隙调整为约0. 5mm, 然后固定好螺丝.

3.Adjusting the amount of oil in the hook
旋梭油量调整

WARNING:

To avoid possible personal injury due to abrupt start of the machine,turn off the power to the machine and check to be sure that the motor has totally stopped rotating in prior.

注意:

为了防止突然启动造成人身事故，请关掉电源，请确认马达确实停止转动后再运行。

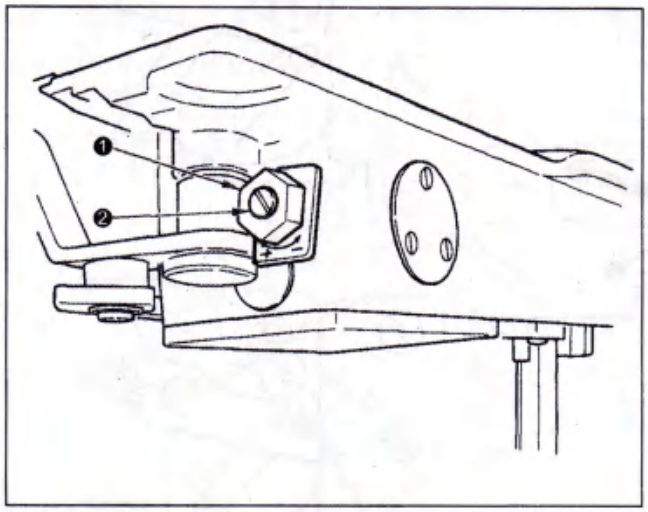

1) Tilt the machine head and open the hook cover.(See p. 43)

2) Loosen nut ❶ ,then turn adjusting screw ❷.

Turn the adjusting screw in the "+" direction(clockwise) to increase the amount of oil.

Turn the adjusting screw in the "_" direction(counterclockwise) to decrease it .

3) After the adjustment,fix the adjusting screw by tightening nut ❷.

After the adjustment,check the amount of oil after using the machine for approximately 10 minutes.

1) 放倒缝纫机，打开旋梭护罩.（参照P43页的说明.）

1) 拧松螺母 ❶ ，转动调节螺丝 ❷.

向 "+" 方向转动之后.....变多

向 "-" 方向转动之后.....变少

1) 调整完之后，把螺母 ❷ 固定好.

调整后，约转动10分钟，确认油量.

4. Height and inclination of the feed dog
送布牙的高度、倾斜度

WARNING:
To avoid possible personal injury due to abrupt start of the machine,turn off the power to the machine and check to be sure that the motor has totally stopped rotating in prior.

注意：
为了防止突然启动造成人身事故，请关掉电源，请确认马达确实停止转动后再运行。

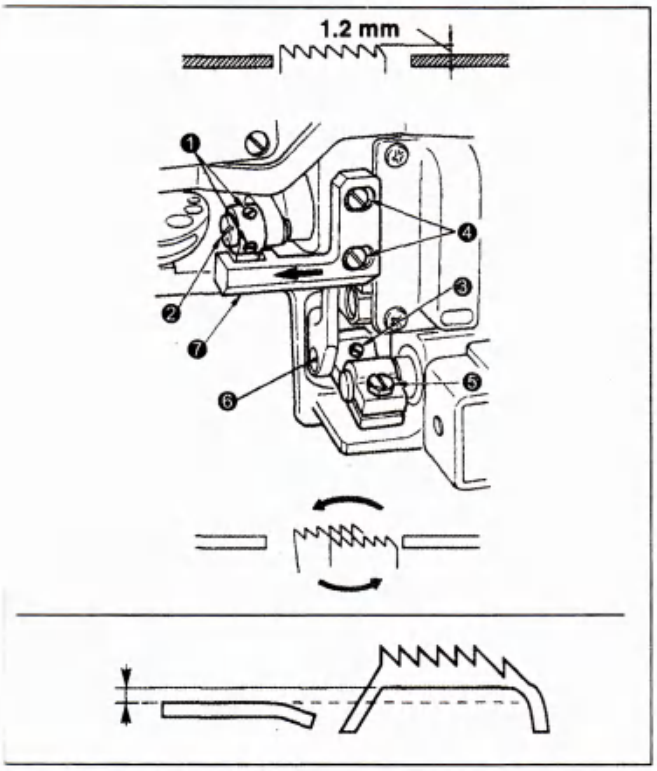

(1) Height of the feed dog

1) Remove the hook cover.(see P. 43)
2) To adjust the height of the feed dog,loosen setscrew ❶ and turn feed driving link pin ❷ using a screwdriver.
3) The standard height of the feed dog is 1.2mm.
4) To adjust the inclination of the feed dog in terms of the throat plate, loosen setscrew ❸ in the eccentric shaft shown in the figure and turn eccentric shaft ❻ using a screwdriver.
5) There can be no space between the counter knife and the underside of the feed dog when adjusting the feed mechanism(change in height and timming)or using a commercially-available feed dog.In this case, place a feed bar spacer(part number:10025906) under the feed mechanism and a throat plate spacer(part number:22503908)under the throat plate so as to secure a space between the counter knife and the underside of the feed dog.
6) When the feed dog is replaced,the position of the feed dog in terms of the throat plate may not be obtained,At this time,loosen feed bar guide serscrews ❹ and feed bar arm clamp screw ❺ ,then adjust the position of the feed dog.
When attaching feed bar guide ❼ ,lightly pressing feed bar guide ❼ in the direction of the arrow mark,tighten feed bar guide setscrew ❹ .Then check that the handwheel smoothly turns.The standard inclination of the feed dog is obtained by adjusting the feed dog so that it becomes horizontal when it rises above the top surface of the throat plate.

(2) Inclination of the feed dog

The standard inclination of the feed dog is obtained by adjusting the feed dog so that it becomes horizontal when it rises above the top surface of the throat plate.

(1) 送布牙的高度

1) 卸下旋梭护罩.（参照P43页的说明.）
2) 调整送布牙的高度. 如图所以，拧松上下送布环轴固定螺丝 ❶ ，用螺丝刀转动上下送布轴 ❷ .
3) 送布牙的标准高度为1. 2mm.
4) 调整送布牙和针板的倾斜时，请拧松图中的送布台轴固定螺丝 ❸ 之后，用螺丝刀转动送布台轴 ❻ .
5) 进行了送布调整（变更高度、同步等），或使用市场出售的送布牙时，又可能固定刀和送布牙下面的空间没有了. 这时，可以往送布台下面垫上送布台垫片(货号：10025906）和在变针器下面垫上护针器垫片(货号：22503908)以确保空间.
6) 更换送布牙后，有可能送布牙与针板的位置变的不正确. 然后，拧松送布导向固定螺丝 ❹ 和送布台固定螺丝 ❺ ，调整送布牙的位置，安装送布台导向器 ❼ 时，请轻轻地向箭头方向按压送布台导向器 ❼ ，同时拧紧送布台导向器固定螺丝 ❹ ，然后确认飞轮的转动是否顺畅.

(1) 送布牙的倾斜度

送布牙的标准倾斜度为针板与送布牙出来时呈水平状态.

5.When replacing the hook cover guide pin
更换旋梭护罩导向销时

WARNING:
To avdid possible personal injury due to abrupt start of the machine,turn off the power to the machine and check to be sure that the motor has totally stopped rotating in prior.
注意:
为了防止突然启动造成人身事故，请关掉电源，请确认马达确实停止转动后再运行。

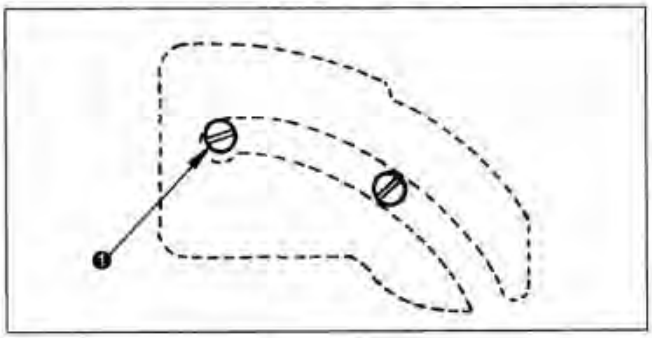

When replacing hook cover guide pin ❶,assemble it after applying SCREW LOCK(for medium strength) to the pin.

更换了旋梭护罩导向销 ❶ 后，请在销上涂螺丝固定漆胶(中强度用)

V.SEWING MACHINE TABLE
关于缝纫机机台

1.When making the table
制作机台时

When the exclusive table is not used,make a table referring to the main dimensions as shown in this drawing.
Thickness of the table has to be 48 to 50 mm so as to secure enough strength.
In addition,when the table support(40005532) is used,the sewing machine head is not leveled if the thickness of the table differs.Be sure to prepare one of 48 to 50 mm thick.

不使用专用机台时，请按照本图所示的主要尺寸进行制作.
为了确保机台厚度具有充分的强度，清使用48-50mm厚的材料.
另外，使用机台支架(40005532)时，如果机台厚度不正确，缝纫机机头便不能保持水平，请一定使用48-50mm的材料.

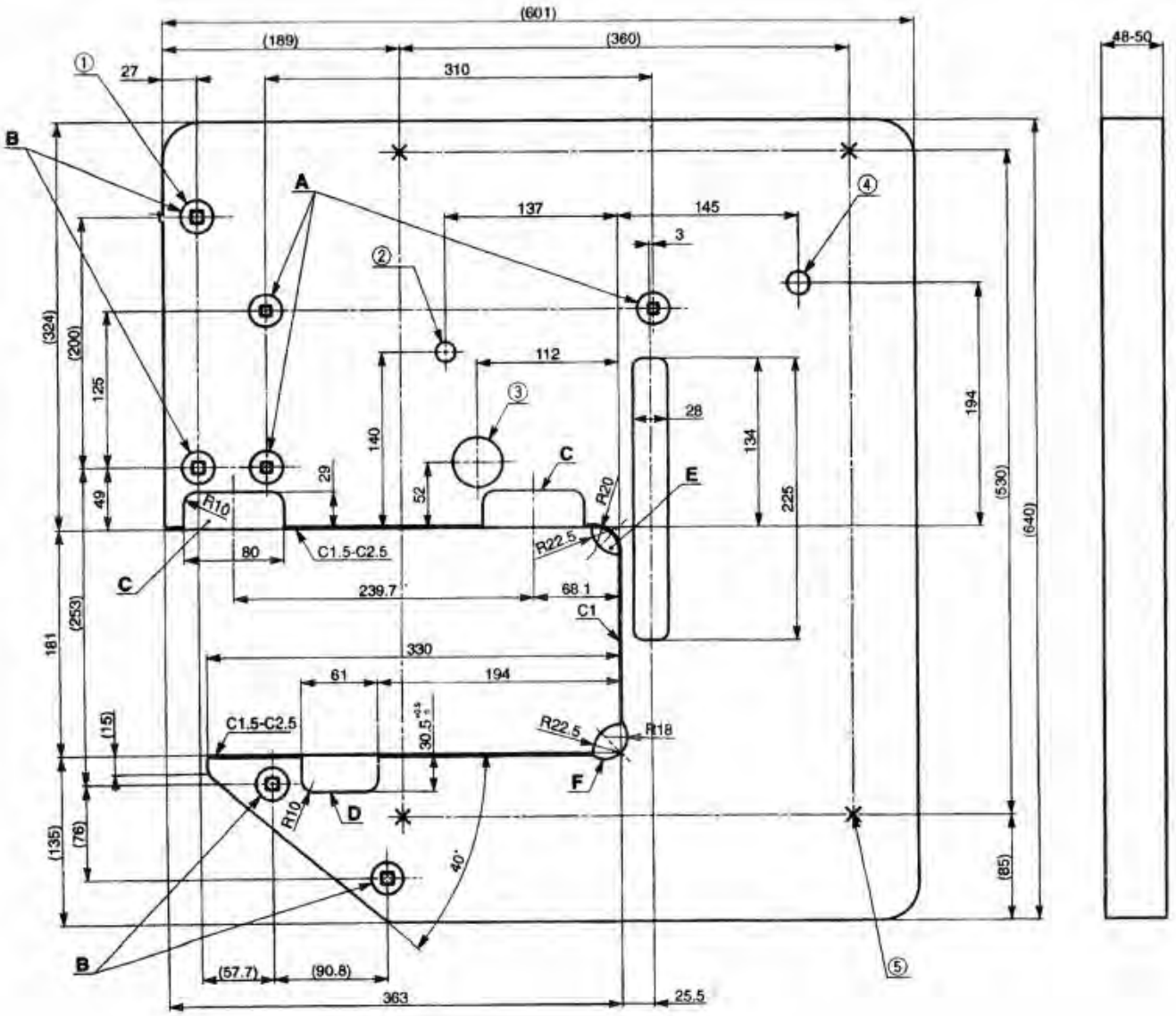

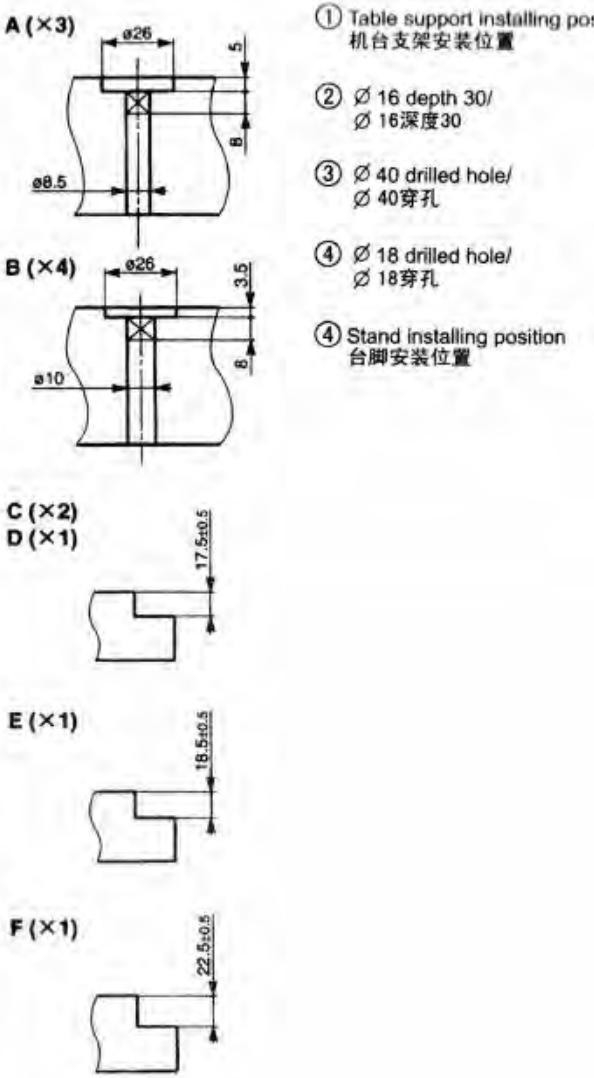

① Table support installing position
机台支架安装位置

② Ø 16 depth 30/
Ø 16深度30

③ Ø 40 drilled hole/
Ø 40穿孔

④ Ø 18 drilled hole/
Ø 18穿孔

④ Stand installing position
台脚安装位置

2.When making the auxiliary table
制作辅助机台时

- When making the auxiliary table,make it referring to the main dimensions as shown in this drawing.
  The outer dimensions can be used when the width is the same as that of sewing machine table.Change the dimensions in accordance with the use.
- Installing position and dimension of the installing metal fittings can be used when sewing machine table is used.
- When installing the table on sewing machine stand,use two M6 bolts.

- 制作辅助机台时，请按照本图所示的主要尺寸进行制作.
  外形尺寸与缝纫机机台宽度相同，因此请根据用途进行更改.
- 安装金属零件的安装位置和尺寸，使用缝纫机机台时的情况.
- 安装缝纫机台脚时，使用2个M6螺栓.

① Installing metal fittings/
安装金属零件

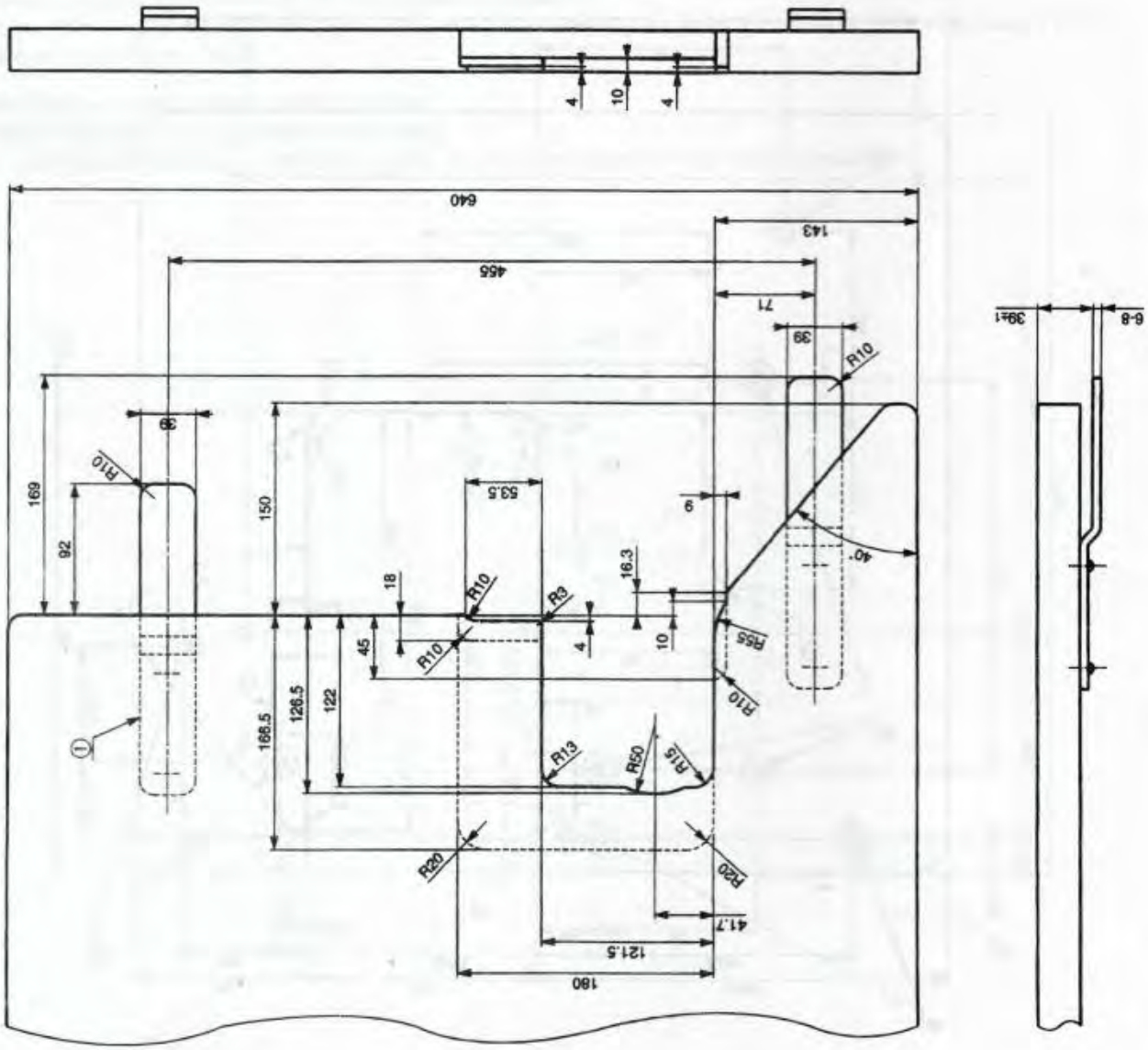

1. 机壳部件（1）……51
Frame & Miscelilaneous cover components(1)
2. 机壳部件（2）……53
Frame & Miscelilaneous cover components(2)
3. 机壳部件（3）……55
Frame & Miscelilaneous cover components(3)
4. 上轴、针杆部件……57
Main shaft.needle bar components
5. 针杆调节部件（1）……59
Needle vibrator & Adjustment components(1)
6. 针杆调节部件（2）……61
Needle vibrator & Adjustment components(2)
7. 压脚部件……63
Presser bar & Feed regulator components
8. 倒缝部件……65
Feed mechanism & Condense components
9. 送布部件……67
Feed mechanism components
10. 下轴部件……69
Hook driving shaft & Hook components
11. 供油部件……71
Lubrication components
12. 线架部件……73
Thread stand components
13. 皮带罩部件……75
Belt cover components
14. 油盘部件……77
Oil reservoir & Knee lifter components
15. 2286N专用零件……79
Exclusive parts for 2286N
16. 2288N专用零件（1）……81
Exclusive parts for 2288N(1)
17. 2288N专用零件（2）……83
Exclusive parts for 2288N(2)

18. 2284N(-7),LJ-2284C-7专用零件（1） ……85
Exclusive parts for 2284NU(-7),2284C-7(1)
19. 2284N(-7), 2284C-7专用零件（2） ……87
Exclusive parts for 2284NU(-7), 2284C(-7)(2)

How to make use of this parts list

1. Explanation of codes

1) "*" mark.....means this part is changed from the previous parts book.

As to the details of the change,refer to ""List for information of change".

2)"01".....refer to "Note" explanation at botton of page.

2. Codes on the "Qty" column

. Each numeral indicates the number of parts required.

."0.1" and "2.5" indicate the length(in meters) of the respective parts.

3. Parentheses mean that the corresponding part is a subpart that constructs an assembly part.

4. Dotted lines on the Figures indicate assembly parts.

1.机壳部件（1）

Frame & Miscelilaneous cover components

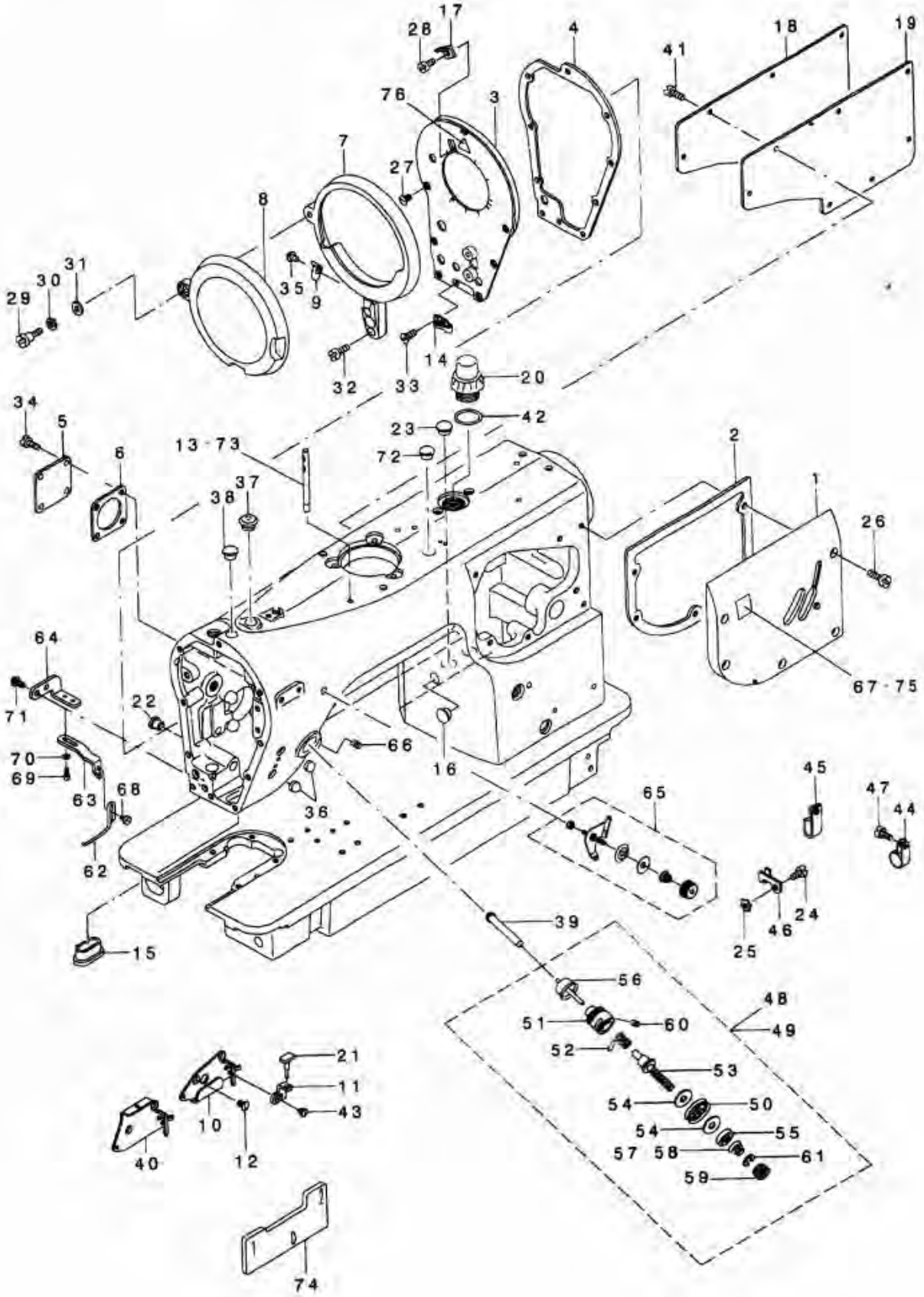

序号	零件代号	名 称	DESCRIPTIPN	数 量
1	QZ1001	右侧盖板组件	Arm side cover compl.	1
2	QZ1002	右侧盖板垫片	Gasket	1
3	QZ1003	面板组件	Face plate compl.	1
4	QZ1004	面板垫片	Gasket	1
5	QZ1005	小盖板	Tension release window plate	1
6	QZ1006	小盖板垫片	Gasket	1
7	QZ1007	挑线杆防护罩	Balance cover base	1
8	QZ1008	挑线杆防护罩板	Balance cover	1
9	QZ1009	弹簧	Spring guard	1
10	QZ1010	线勾	Balance thread guide A	1
11	QZ1011	线勾	Rubber plug	1
12	QZ1012	螺钉	Screw 11/64-40 L=8	2
13	QZ1013	过线销	Thread guide pin	1
14	QZ1014	线勾	Spring guard	1
15	QZ1015	机壳防油板	Arm oil shield	1
16	QZ1016	橡皮塞	Rubber plug	1
17	QZ1017	挑线切刀	Take-up thread cutter	1
18	QZ1018	后盖板	Side plate	1
19	QZ1019	后盖板垫片	Gasket	1
20	QZ1020	油窗	Oil sight window	1
21	QZ1021	橡胶垫	Rubber stopper	1
22	QZ1022	橡皮塞	Plug D=8 L=4.5	1
23	QZ1023	橡皮塞	Rubber plug	2
24	QZ1024	螺钉	Screw 3/16-28 L=10	1
25	QZ1025	波形弹性垫圈	Toothed washer D=5.3	1
26	QZ1026	螺钉	Screw 3/16-28 L=14	5
27	QZ1027	螺钉	Screw 11/16-40 L=8	7
28	QZ1028	螺钉	Screw 1/8-44 L=3.8	1
29	QZ1029	轴位螺钉	High screw D=6.35 H=7.5	1
30	QZ1030	弹性垫圈	Waved washer 6.4x11x0.3	1
31	QZ1031	垫圈	Washer 6.5x11x1	1
32	QZ1032	螺钉	Screw 11/64-40 L=9	2
33	QZ1033	螺钉	Screw 9/64-40 L=7	1
34	QZ1034	螺钉	Screw 3/16-28 L=6	4
35	QZ1035	螺钉	Screw 3/16-28 L=6	1
36	QZ1036	橡皮塞	Driving stopper rubber	2
37	QZ1037	橡皮塞	Rubber plug	1
38	QZ1038	橡皮塞	Plug	1
39	QZ1039	松线销	Thread release	1
40	QZ1040	过线勾	Balance thread guide T	1
41	QZ1041	螺钉	Screw 3/46-28 L=10	8
42	QZ1042	橡皮塞	Rubber plug	1
43	QZ1043	螺钉	Screw 9/64-40 L=3.5	1
44	QZ1044	电线夹头	Cable clip C	1
45	QZ1045	电线夹头	"Cord holder,large"	2
46	QZ1046	夹头	Cable holder	1
47	QZ1047	螺钉	Screw 3/16-28 L=10	1
48	QZ1048	线器组件	Thread tension asm.	1
49	QZ1049	夹线器组件	Thread tension asm.	1
50	QZ1050	夹线板组件	Thread tension disk compl.	(1)
51	QZ1051	夹线调节座	Thread tension rod asm.	(1)
52	QZ1052	挑线簧	Take-up spring	(1)
53	QZ1053	夹线螺钉	Thread tension post asm.	(1)
54	QZ1054	羊毛毡	Felt	(2)
55	QZ1055	松线板	Thread disc holder	(1)
56	QZ1056	松线销组件	Thread tension pin asm.	(1)
57	QZ1057	夹线簧	Tension spring	(1)
58	QZ1058	夹线簧	Tension spring	(1)
59	QZ1059	夹线螺母	Tension nut	(1)
60	QZ1060	夹线调节座螺钉	Screw 9/64-40 L=5.5	(1)
61	QZ1061	夹线螺母止动板	Rotating stopper	(1)
62	QZ1062	夹线勾	Support balance	1
63	QZ1063	夹线勾安装台	Support balance base	1
64	QZ1064	夹线勾安装座	Mounting base	1
65	QZ1065	小夹线组件	Pre-tension controller asm.	1
66	QZ1066	螺钉	Screw 11/64-40 L=6.5	1
67	QZ1067	使用说明标签	Operation seal	1
68	QZ1068	螺钉	Screw 11/64-40 L=5.0	1
69	QZ1069	螺钉	Screw 1/8-40 L=7	2
70	QZ1070	垫圈	Washer 3.3x6x0.5	2
71	QZ1071	螺钉	Screw 11/64-40 L=9	2
72	QZ1072	橡皮塞	Rubber plug	1
73	QZ1073	过线销	Thread guide bar	1
74	QZ1074	定位块	Timming gaug D	1
75	QZ1075	使用说明标签	Operation seal	1
76	QZ1076	注意事项标签	Attention seal	1

2.机壳部件（2）

Frame & Miscelilaneous cover components(2)

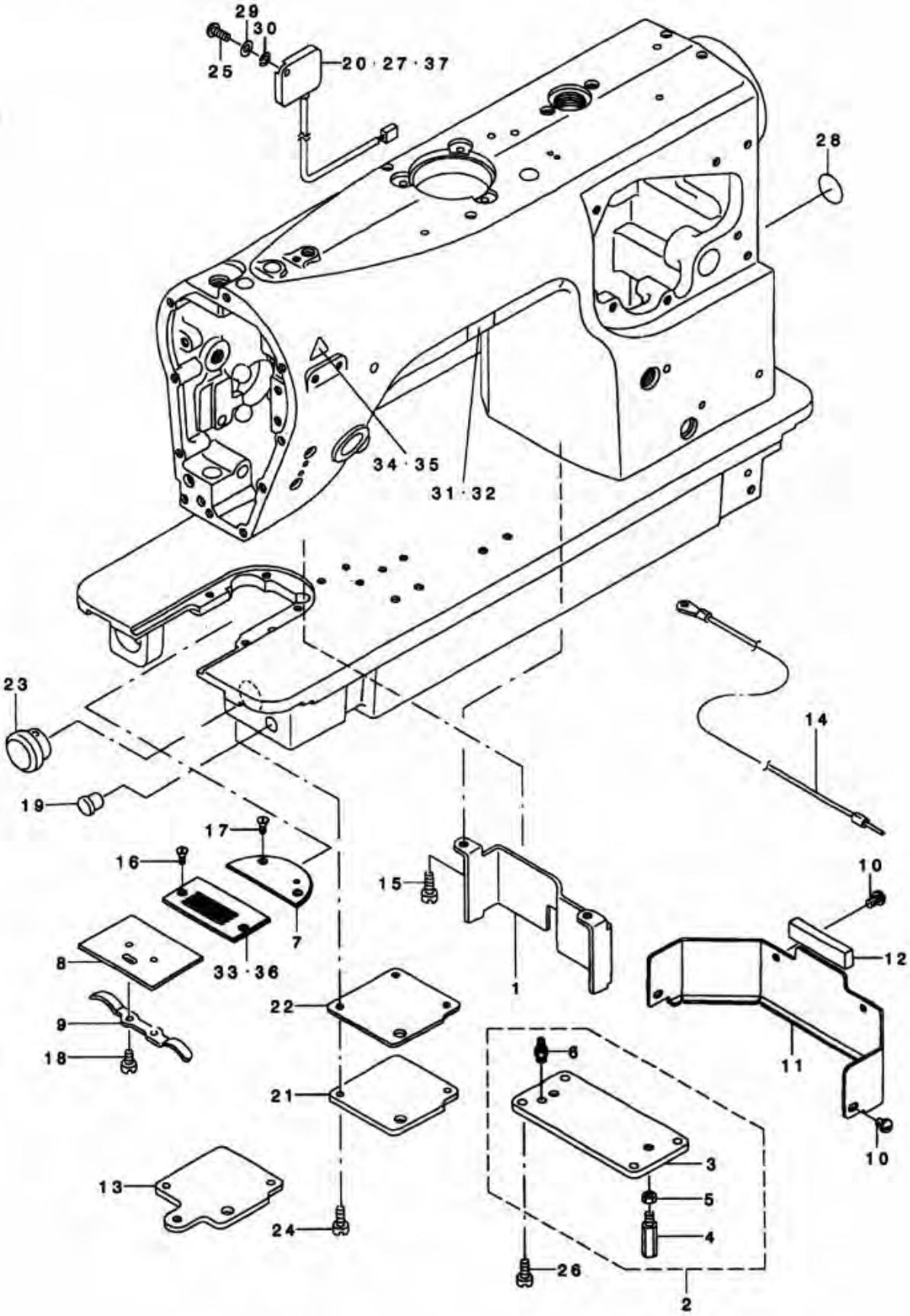

序号	零件代号	名 称	DESCRIPTIPN	数 量
1	QZ2001	支撑板	Support plate	1
2	QZ2002	齿轮盖板组件	Helical geap box cover asm.	1
3	QZ2003	齿轮盖板	Helical geap box cover	(1)
4	QZ2004	螺钉	Bed screw stud	(2)
5	QZ2005	螺母	Nut 5/16-24	(2)
6	QZ2006	连接螺钉	Connecting screw	(1)
7	QZ2007	盖板	Bed plate	1
8	QZ2008	推板	Bed slide	1
9	QZ2009	推板簧	Bed slide spring	1
10	QZ2010	螺钉	Screw 11/64-40 L=5	2
11	QZ2011	防油板	Oil shield plate	1
12	QZ2012	羊毛毡	Oil shield rubber	1
13	QZ2013	齿轮盖板	Helical bevel gear box cover	1
14	QZ2014	地线组件	Ground wire asm.	1
15	QZ2015	螺钉	Screw 11/64-40 L=12	2
16	QZ2016	针板螺钉	Screw 9/64-40 L=7.5	2
17	QZ2017	盖板螺钉	Screw 9/64-40 L=7.5	2
18	QZ2018	推板簧螺钉	Screw 3/32-56 L=1.9	2
19	QZ2019	O型圈	Rubber plug	1
20	QZ2020	电线组件	Resistance pack as asm.	1
21	QZ2021	齿轮盖板	Helical bevel geap box cover	1
22	QZ2022	盖板垫片	Gasket	1
23	QZ2023	尼龙夹头	Nylon cap	1
24	QZ2024	螺钉	Screw 11/64-40 L=9	3
25	QZ2025	螺钉	Screw 3/16-28 L=12	1
26	QZ2026	螺钉	Screw 11/64-40 L=9	4
27	QZ2027	电线组件	Resistance pack al asm.	1
28	QZ2028	接地标示	Ground mark	1
29	QZ2029	垫圈	Washer 5x10.5x1	1
30	QZ2030	弹簧垫圈	Spring washer 5.1x9.2x1.3	1
31	QZ2031	安全使用标签	"Safety label,1(small)."	1
32	QZ2032	安全使用标签	"Safety label.,3(small)."	1
33	QZ2033	针板	Needle plate	1
34	QZ2034	注意标签	Caution label(16)	1
35	QZ2035	注意标签	Attention seal	1
36	QZ2036	针板	Needle plate	1
37	QZ2037	电线组件	Resistance pack asm.	1

3.机壳部件（3）

Frame & Miscelilaneous cover components(3)

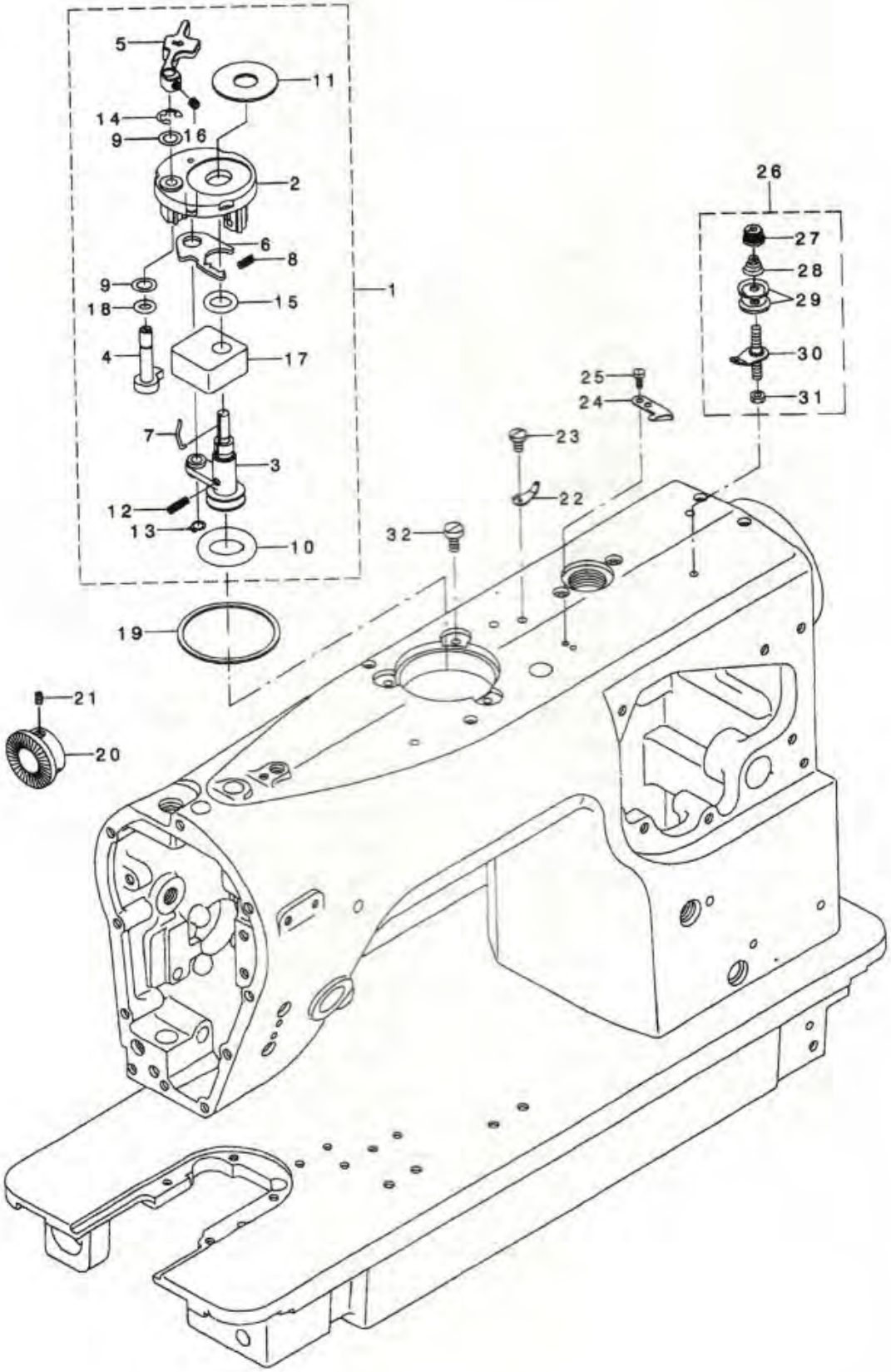

序号	零件代号	名 称	DESCRIPTIPN	数 量
1	QZ3001	绕线器组件	Bobbin device asm.	1
2	QZ3002	绕线座	Bobbin fitting basis compl.	(1)
3	QZ3003	绕线轴组件	Bobbin shaft compl.	(1)
4	QZ3004	绕线凸轮轴组件	Bobbin cam shaft compl.	(1)
5	QZ3005	满线板	Bobbin lever	(1)
6	QZ3006	调节板	Adjusting plate	(1)
7	QZ3007	绕线弹簧	Latch spring	(1)
8	QZ3008	压力弹簧	Pressur foot spring	(1)
9	QZ3009	垫圈	Vertical roller washer	(2)
10	QZ3010	绕线橡胶轮	Rubber ring	(1)
11	QZ3011	梭芯垫片	Cushion	(1)
12	QZ3012	绕线轴弹簧	Spring	(1)
13	QZ3013	卡圈	Retaining ring	(1)
14	QZ3014	开口挡圈	E-ring	(1)
15	QZ3015	O型圈	Rubber ring	(1)
16	QZ3016	螺钉	Screw 11/64-40 L=4	(1)
17	QZ3017	绕线台	Oil reservoir base	(1)
18	QZ3018	O型圈	O-ring	(1)
19	QZ3019	绕线器垫圈	Packing	1
20	QZ3020	伞齿轮	Driving wheel	1
21	QZ3021	伞齿轮螺钉	Screw 1/4-40 L=6	2
22	QZ3022	线勾	Thread guide	1
23	QZ3023	线勾螺钉	Screw 11/64-40 L=7.8	1
24	QZ3024	绕线割线刀	Thread cutter	1
25	QZ3025	割线刀螺钉	Screw 9/64-40 L=6	2
26	QZ3026	小夹线器组件	Bobbin thread tension asm.	1
27	QZ3027	夹线螺母	Thread tension nut	(1)
28	QZ3028	夹线弹簧	Thread tension spring	(1)
29	QZ3029	夹线板	Bobbin winder tension disc	(2)
30	QZ3030	夹线螺钉	Bobbin thread tension rod asm.	(1)
31	QZ3031	锁紧螺母	Nut 11/64-40	(1)
32	QZ3032	螺钉	Screw 3/16-28 L=10	3

4.上轴部件

Main shaft.needle bar component

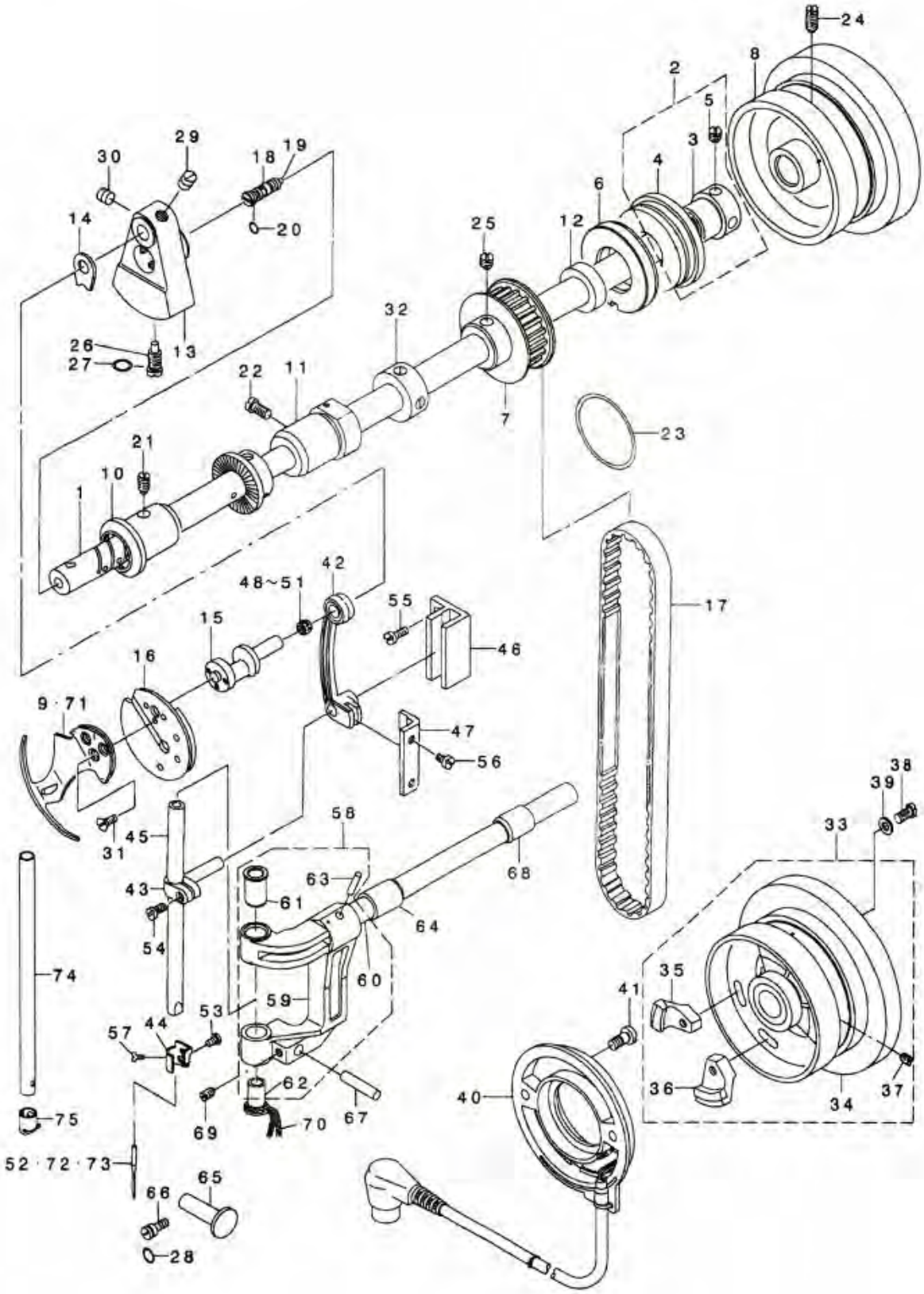

序号	零件代号	名 称	DESCRIPTIPN	数 量
1	LJQZ4001	上轴	Main shaft	1
2	QZ4002	轴承衬套组件	Thrust collar asm.	1
3	QZ4003	轴承衬套	Thrust collar asm.	(1)
4	QZ4004	轴承	Bearing D=20X47	(1)
5	QZ4005	螺钉	Screw 1/4-40 L=6	(2)
6	QZ4006	油封挡圈	Oil seal collar	1
7	QZ4007	同步带轮（上）	Sprocket	1
8	QZ4008	主动轮	Hand wheel	1
9	QZ4009	挑线杆	Balance	1
10	QZ4010	上轴前套	"Main shaft bushing,front"	1
11	QZ4011	上轴中套	"Main shaft bushing,intermedia"	1
12	QZ4012	油封	Oil seal	1
13	QZ4013	针杆曲柄	Counterweight	1
14	QZ4014	针杆曲柄防护板	Counterweight protecting plate	1
15	QZ4015	挑线曲柄轴	Needle bar crank	1
16	QZ4016	挑线曲柄组件	Take-up counterweight asm.	1
17	QZ4017	同步带	Timing belt	1
18	QZ4018	针杆曲柄销	Pin	1
19	QZ4019	油线	Oil wick	1
20	QZ4020	O型圈	Rubber ring	1
21	QZ4021	螺钉	Screw 15/64-28 L=10.5	1
22	QZ4022	螺钉	Screw 15/64-28 L=11	1
23	QZ4023	O型圈	Rubber ring	1
24	QZ4024	主动轮螺钉	Screw 15/64-28 L=15	2
25	QZ4025	同步带轮螺钉	Screw 1/4-40 L=6	2
26	QZ4026	针杆曲柄定位螺钉	Screw 9/32-28 L=16	1
27	QZ4027	O型圈	Rubber ring	1
28	QZ4028	O型圈	Rubber ring	1
29	QZ4029	螺钉	Screw 1/4-40 L=6	2
30	QZ4030	螺钉	Screw 1/4-40 L=6	2
31	QZ4031	螺钉	Screw 9/64-40 L=8.6	3
32	QZ4032	上轴挡圈组件	Thrust collar asm. D=14.72 W=12	1
33	QZ4033	主动轮组件	Hand wheel asm.	1
34	QZ4034	主动轮	Hand wheel compl.	(1)
35	QZ4035	检测器磁铁组件	(B) Magnet fitting base b asm.	(1)
36	QZ4036	检测器磁铁组件	(A) Magnet fitting base a asm.	(1)
37	QZ4037	螺钉	Screw 15/64-28 L=15	(2)
38	QZ4038	螺钉	Screw 11/64-40 L=12	2
39	QZ4039	垫圈	Washer 4.5x10x0.8	2
40	QZ4040	检测器组件	Dynamo stator	1
41	QZ4041	螺钉	Screw	2
42	QZ4042	针杆连杆	Needle bar crank rod asm.	1
43	QZ4043	针杆接头	Needle bar connection	1
44	QZ4044	线勾	Thread rack	1
45	QZ4045	针杆	Needle rod	1
46	QZ4046	针杆接头导向块	Neede bar connection guide	1
47	QZ4047	针杆连杆导向块	Crank rod guide	1
48	QZ4048	轴承	"Needle bearing,a"	1
49	QZ4049	轴承	Needle bearing	1
50	QZ4050	轴承	Needle bearing	1
51	QZ4051	轴承	Needdle bearing	1
52	QZ4052	机针	Needle 438 #75	1
53	QZ4053	螺钉	Screw 1/8-44 L=4.9	1
54	QZ4054	螺钉	Screw 9/64-40 L=8.5	1
55	QZ4055	螺钉	Screw 11/64-40 L=9	2
56	QZ4056	螺钉	Screw 11/64-40 L=7	2
57	QZ4057	螺钉	Screw 3/32-56 L=3	1
58	QZ4058	针杆移动架组件	Needle bar yoke asm.	1
59	QZ4059	针杆移动架	Needle bar yoke	(1)
60	QZ4060	针杆移动架轴	Shaft	(1)
61	QZ4061	针杆上轴套	"Needle bar bushing ,upper D=7"	(1)
62	QZ4062	针杆下轴套	"Needle bar bushing ,lower D=7"	(1)
63	QZ4063	弹性圆柱销	Spring pin	(1)
64	QZ4064	针杆移动架轴套（前）	Feed rocker shaft bushing	1
65	QZ4065	调节销	Needle bar yoke presser	1
66	QZ4066	螺钉	Screw	1
67	QZ4067	导向销	Guide pin	1
68	QZ4068	针杆移动架轴套（后）	"Shaft bushing,rear"	1
69	QZ4069	螺钉	Screw 3/16-28 L=7	1
70	QZ4070	油线	Oil wick	0.1
71	QZ4071	挑线杆	Balance V	1
72	QZ4072	机针	Needle 134suk 70	1
73	QZ4073	机针	Needle DPX5 #10	1
74	QZ4074	针杆	Needle rod	1
75	QZ4075	针杆过线环	Needle rod thread rack	1

5.针杆调节部件（1）

Needle vibrator & Adjustment components(1)

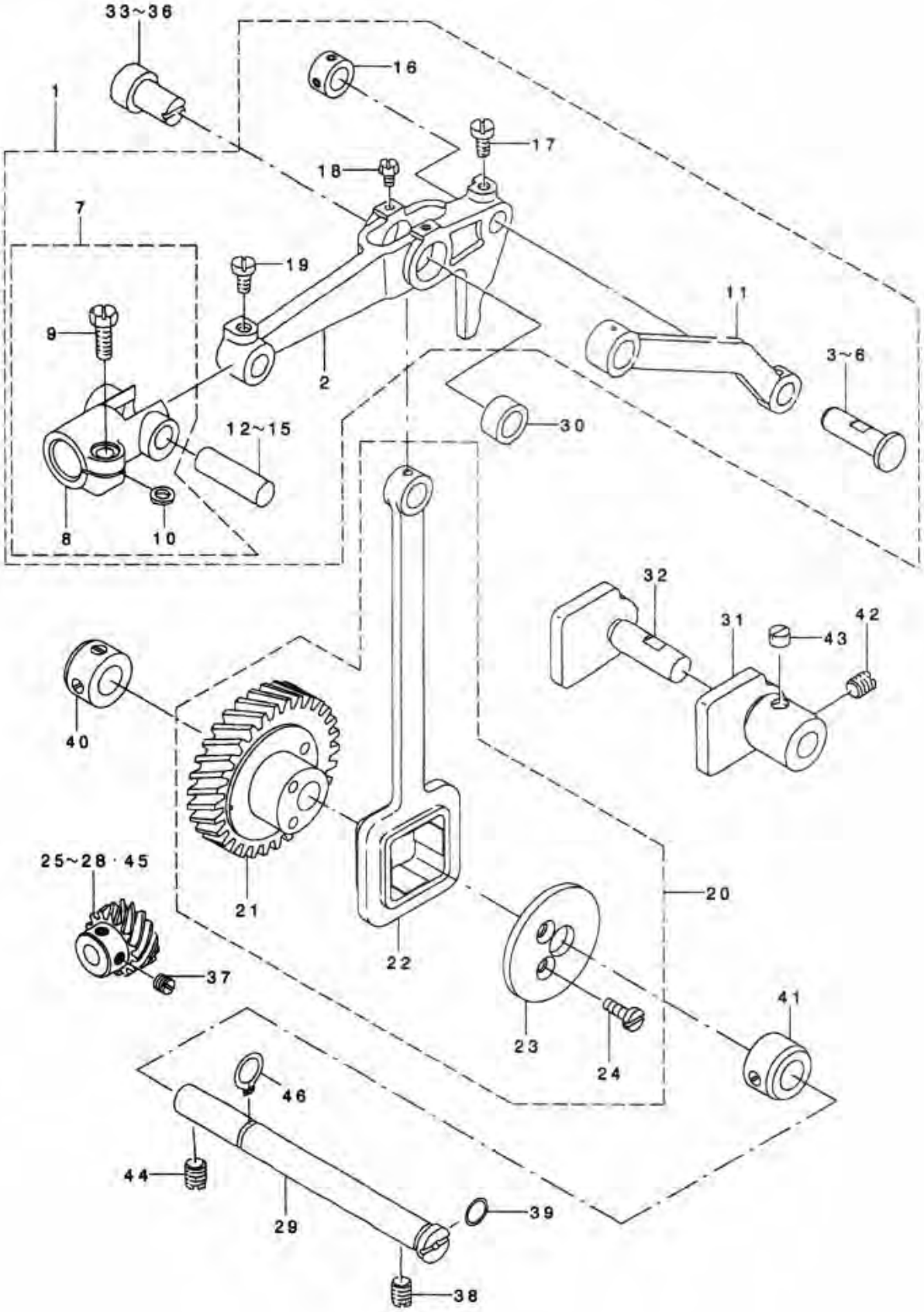

序号	零件代号	名 称	DESCRIPTIPN	数 量
1	QZ5001	针杆调节大组件	Drive link asm.	1
2	QZ5002	针杆驱动连杆	Drive link	(1)
3	QZ5003	连杆销	Link	(1)
4	QZ5004	连杆销	Shaft	(1)
5	QZ5005	连杆销	Shaft	(1)
6	QZ5006	连杆销	Shaft	(1)
7	QZ5007	针杆驱动接头组件	Shaft connection asm.	(1)
8	QZ5008	针杆驱动接头	Shaft connection asm.	(1)
9	QZ5009	螺钉	Screw 3/16-28 L=14	(1)
10	QZ5010	垫圈	Washer 5.1x7.5x0.5	(1)
11	QZ5011	连杆	Link	(1)
12	QZ5012	销	Pin D	(1)
13	QZ5013	销	Pin	(1)
14	QZ5014	销	Pin B	(1)
15	QZ5015	销	Pin C	(1)
16	QZ5016	挡圈	Thrust collar asm.	(1)
17	QZ5017	螺钉	Screw 11/64-40 L=8.5	(1)
18	QZ5018	螺钉	Screw 9/64-40 L=5.5	(2)
19	QZ5019	螺钉	Screw 11/64-40 L=8.5	(1)
20	QZ5020	针杆驱动凸轮组件	Needle vibrating cam asm.	1
21	QZ5021	针杆驱动凸轮	Needle vibrating cam	(1)
22	QZ5022	针杆驱动凸轮连杆	Needle vibrating rod	(1)
23	QZ5023	凸轮挡板	Cam cover	(1)
24	QZ5024	螺钉	Screw 11/64-40 L=8.5	(2)
25	QZ5025	齿轮	A Screw gear A	1
26	QZ5026	齿轮	B Screw gear B	1
27	QZ5027	齿轮	C Screw gear C	1
28	QZ5028	齿轮	D Screw gear D	1
29	QZ5029	针杆驱动凸轮轴	Needle vibrating cam shaft	1
30	QZ5030	挡圈	Bushing	1
31	QZ5031	驱动连杆导向块	(A) Drive link guide A	1
32	QZ5032	驱动连杆导向块	(B) Drive link guide B	1
33	QZ5033	调节销	(A) Pin A	1
34	QZ5034	调节销	(B) Pin B	1
35	QZ5035	调节销	(C) Pin B	1
36	QZ5036	调节销	(D) Pin D	1
37	QZ5037	螺钉	Screw 1/4-40 L=6	2
38	QZ5038	螺钉	Screw 1/4-40 L=8.5	1
39	QZ5039	O型圈	Rubber ring	1
40	QZ5040	挡圈组件	Thrust collar asm. D=10.32 W=1	1
41	QZ5041	挡圈组件	Thrust collar asm. D=10.32 W=1	1
42	QZ5042	螺钉	Screw 15/64-28 L=7	1
43	QZ5043	螺钉	Screw 1/4-40 L=4.2	1
44	QZ5044	螺钉	Screw 1/4-40 L=8	1
45	QZ5045	齿轮	E Screw gear E	1
46	QZ5046	挡圈	Snap ring M10	1

6.针杆调节部件（2）

Needle vibrator & Adjustment components(2)

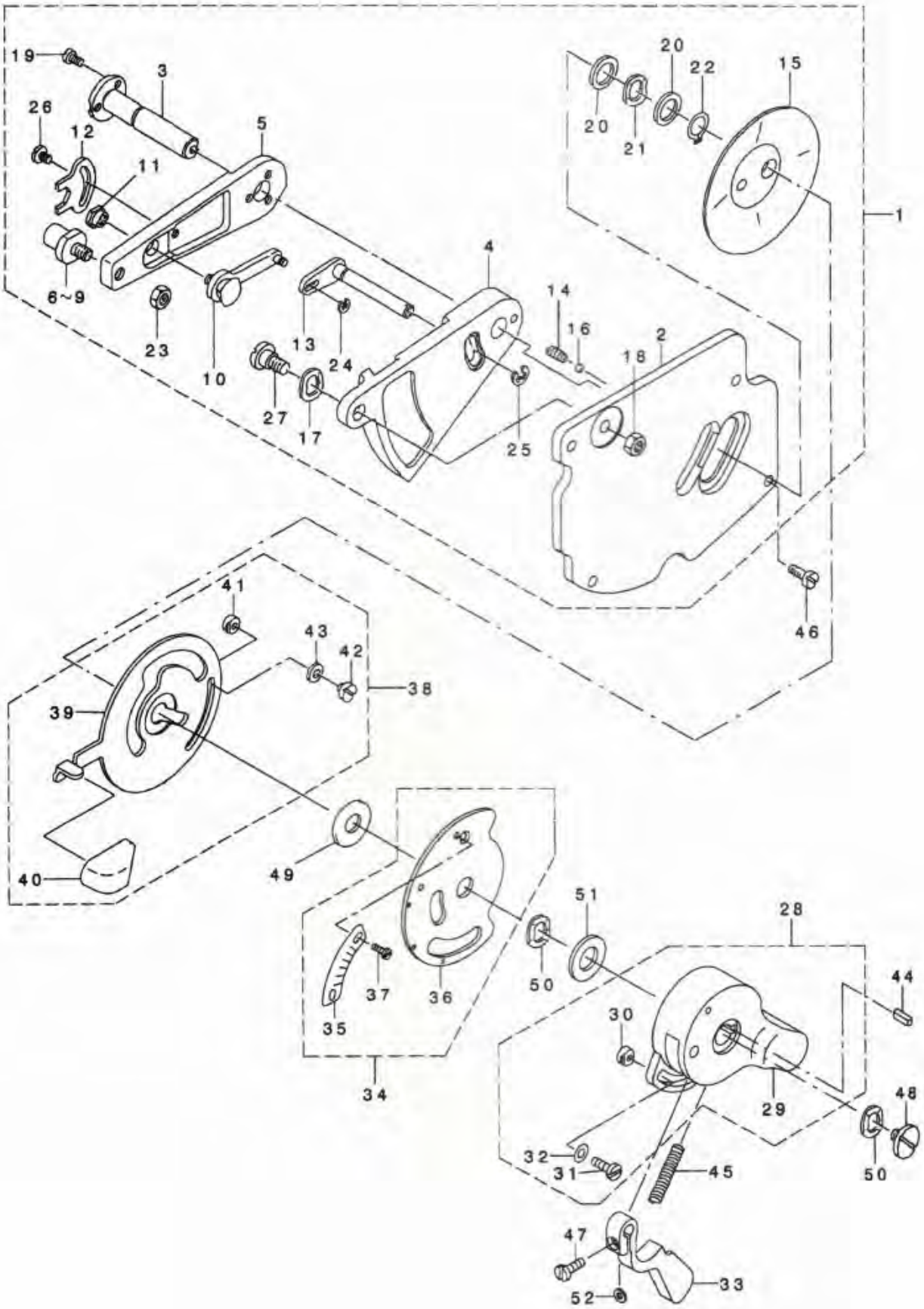

序号	零件代号	名 称	DESCRIPTIPN	数 量
1	QZ6001	针幅标盘组件	Base asm.	1
2	QZ6002	标盘安装板	Base mounting plate	(1)
3	QZ6003	导向小轴	Shaft	(1)
4	QZ6004	机针位置调节板	Needle position adjusting base	(1)
5	QZ6005	调节连杆	arm	(1)
6	QZ6006	轴位螺钉	Shaft	(1)
7	QZ6007	轴位螺钉	Shaft	(1)
8	QZ6008	轴位螺钉	Shaft	(1)
9	QZ6009	轴位螺钉	Shaft	(1)
10	QZ6010	限位块组件	Stopper asm.	(1)
11	QZ6011	螺母	Nut	(1)
12	QZ6012	螺母限位板	Nut stopper	(1)
13	QZ6013	驱动连杆组件	Lever asm.	(1)
14	QZ6014	螺钉	Spring	(1)
15	QZ6015	防油垫	Oil shield	(1)
16	QZ6016	钢球	Hand stop crank shaft ball	(1)
17	QZ6017	波型垫圈	Waved washer 8.5x12.5x0.3	(3)
18	QZ6018	螺母	Nut 15/64-28	(1)
19	QZ6019	螺钉	Screw 9/64-40 L=6	(3)
20	QZ6020	垫圈	Washer	(2)
21	QZ6021	波型垫圈	Waved washer	(1)
22	QZ6022	挡圈	Snap ring M10	(1)
23	QZ6023	螺母	Nut 15/64-28	(1)
24	QZ6024	开口挡圈	E-ring	(1)
25	QZ6025	开口挡圈	E-ring 4	(1)
26	QZ6026	螺钉	Screw 9/64-40 L=5.0	(1)
27	QZ6027	轴位螺钉	Hinge screw D=8 H=4	(1)
28	QZ6028	调节旋钮组件	Knob asm.	1
29	QZ6029	调节旋钮	Knob asm.	(1)
30	QZ6030	限位块	Lever stopper	(2)
31	QZ6031	螺钉	Screw 9/64-40 L=6	(2)
32	QZ6032	垫圈	Washer 3.7x8x1	(2)
33	QZ6033	调节扳手	Lever	1
34	QZ6034	针幅标盘组件	Scale plate asm.	(1)
35	QZ6035	针幅标盘	Scale plate	(1)
36	QZ6036	标盘安装板小组件	Scale mounting base compl	(1)
37	QZ6037	螺钉	Screw 1/8-44 L=2.5	(2)
38	QZ6038	针位置调节板组件	Lever asm.	1
39	QZ6039	针位置调节板	Lever	(1)
40	QZ6040	针位置调节把手	Knob	(1)
41	QZ6041	限位块	Lever stopper	(2)
42	QZ6042	螺钉	Screw 9/64-40 L=3.5	(2)
43	QZ6043	垫圈	Washer 3.7x8x1	(2)
44	QZ6044	平键	Key	1
45	QZ6045	弹簧	Spring	1
46	QZ6046	螺钉	Screw 3/16-28 L=10	4
47	QZ6047	螺钉	Screw 9/64-40 L=8.5	1
48	QZ6048	螺钉	Screw 3/16-32 L=6.5	1
49	QZ6049	垫圈	Washer	1
50	QZ6050	波型垫圈	Waved washer	1
51	QZ6051	垫圈	Washer	1
52	QZ6052	垫圈	Washer 3.7x6x1	1

7.压脚部件

Presser bar & Feed regulator components

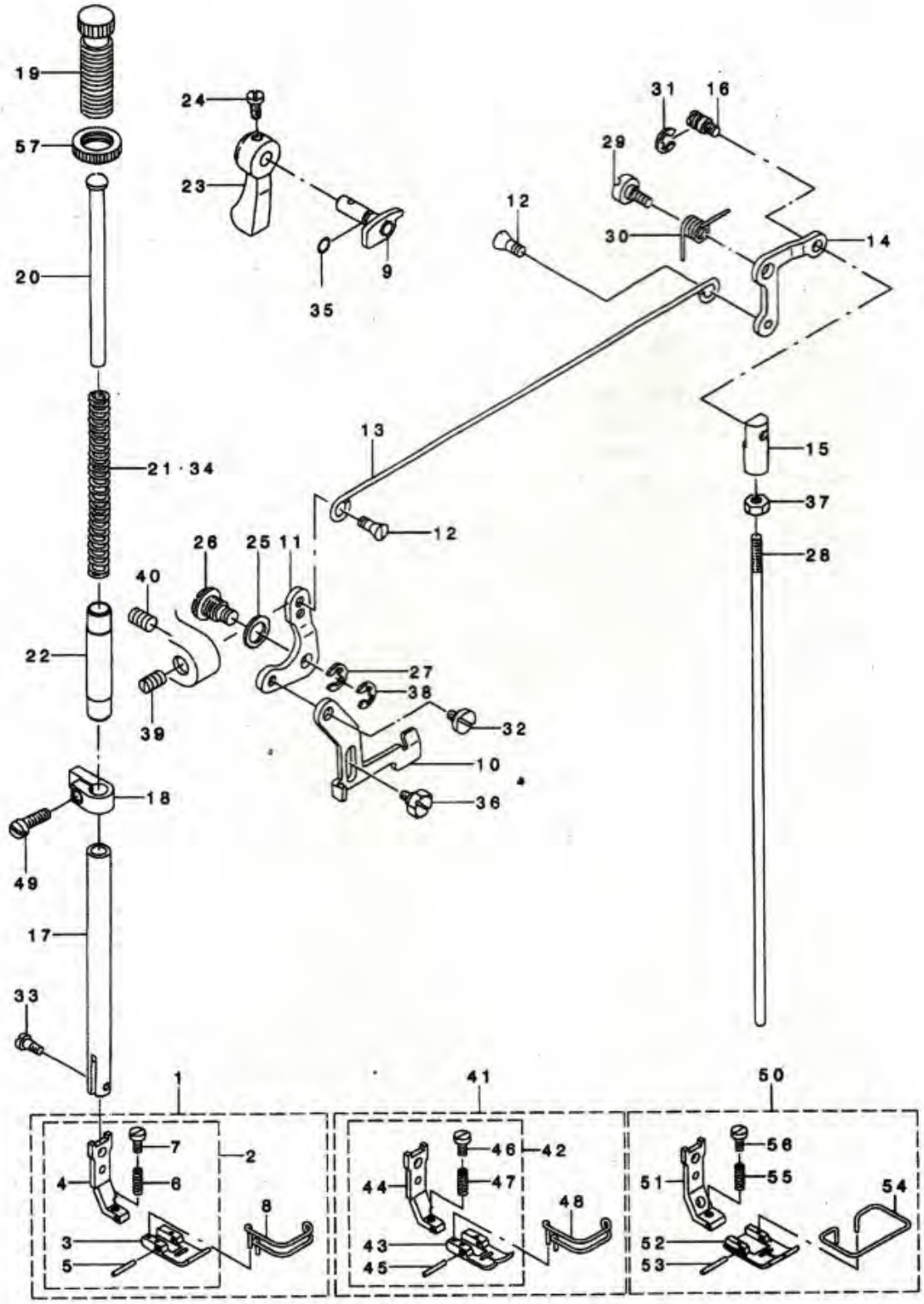

序号	零件代号	名 称	DESCRIPTIPN	数 量
1	QZ7001	压脚大组件	Presser foot asm.	1
2	QZ7002	压脚组件	Presser foot asm.	(1)
3	QZ7003	压脚底板	Presser foot(lower)	(1)
4	QZ7004	压脚柄	Presser foot(upper)	(1)
5	QZ7005	压脚销	Presser pin	(1)
6	QZ7006	压脚弹簧	Spring	(1)
7	QZ7007	压脚螺钉	Screw 9/64-40 L=7.5	(1)
8	QZ7008	压脚防护罩	Finger cover	(1)
9	QZ7009	压脚提升凸轮组件	Hand lifter cam compl	1
10	QZ7010	松线凸轮	Lifting lever	1
11	QZ7011	膝控提升杠杆（左）	Lifting lever link	1
12	QZ7012	螺钉	Hinge screw	2
13	QZ7013	膝控提升拉杆	Lifting lever connecting rod	1
14	QZ7014	膝控提升杠杆（右）	Lifting lever link arm	1
15	QZ7015	膝控提升杠杆接头	Swivel	1
16	QZ7016	接头螺钉	Connecting rod hinge screw	1
17	QZ7017	压紧杆	Presser bar	1
18	QZ7018	压紧杆导架	Presser bar guide bracket	1
19	QZ7019	调压螺钉	Presser spring regulator	1
20	QZ7020	压紧杆弹簧导柱	Presser guide bar	1
21	QZ7021	压紧杆弹簧	Presser spring	1
22	QZ7022	压紧杆轴套	"Presser bar bushing,lower"	1
23	QZ7023	压脚扳手	Hand lifter	1
24	QZ7024	压脚扳手螺钉	Screw	1
25	QZ7025	提升杠杆（左）螺钉垫圈	Lifting lever gasket	1
26	QZ7026	提升杠杆（左）螺钉	Hinge pin	1
27	QZ7027	开口挡圈	snap ring	1
28	QZ7028	压脚提升顶杆	"Connecting rod,vertical"	1
29	QZ7029	膝控提升杠杆（右）螺钉	Knee lifting link step-screw	1
30	QZ7030	提升杠杆（右）复位簧	Knee lifting link spring	1
31	QZ7031	开口挡圈	E-ring	1
32	QZ7032	螺钉	Hinge screw D=6.35 H=3	1
33	QZ7033	压脚螺钉	Screw 9/64-40 L=8.5	1
34	QZ7034	压紧杆弹簧	Presser spring T	1
35	QZ7035	O型圈	Rubber ring	1
36	QZ7036	轴位螺钉	Hinge screw D=6.35 H=2.7	1
37	QZ7037	螺母	Nut 3/16-32	1
38	QZ7038	卡圈	E-ring 6	1
39	QZ7039	螺钉	Screw	1
40	QZ7040	螺钉	Screw 15/64-28 L=4.7	1
41	QZ7041	压脚大组件	Presser foot asm.	1
42	QZ7042	压脚组件	Presser foot asm.	(1)
43	QZ7043	压脚底板	Presser foot asm.(lower)	(1)
44	QZ7044	压脚柄	Presser foot asm.(upper)	(1)
45	QZ7045	压脚销	Presser pin	(1)
46	QZ7046	压脚螺钉	Screw 9/64-40 L=7.5	(1)
47	QZ7047	压脚弹簧	Spring	(1)
48	QZ7048	压脚防护罩	Finger cover	(1)
49	QZ7049	压紧杆导架螺钉	Screw 11/64-40 L=10.5	1
50	QZ7050	压脚组件	Presser asm.	1
51	QZ7051	压脚柄	Presser foot(upper)	(1)
52	QZ7052	压脚底板	Presser foot(lower)	(1)
53	QZ7053	压脚销	Presser pin	(1)
54	QZ7054	压脚防护罩	Safety cover	(1)
55	QZ7055	压脚弹簧	Spring	(1)
56	QZ7056	压脚螺钉	Screw 9/64-40 L=7.5	(1)
57	QZ7057	螺母	Nut	1

8.倒缝部件

Feed mechanism & Condense components

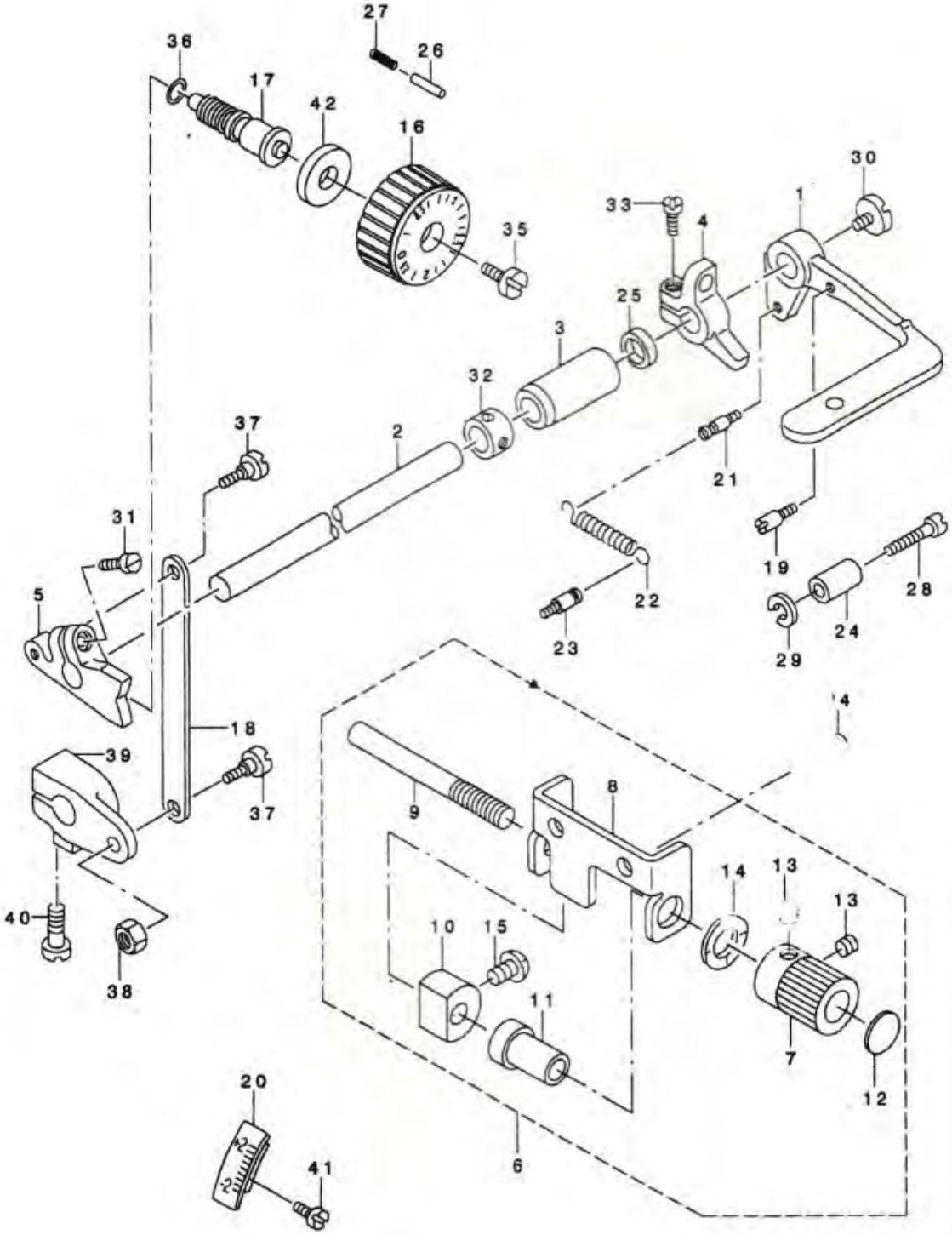

序号	零件代号	名 称	DESCRIPTIPN	数 量
1	QZ8001	倒缝扳手	Lever	1
2	QZ8002	倒缝扳手轴	Shaft	1
3	QZ8003	倒缝扳手轴套	Bushing	1
4	QZ8004	倒缝曲柄	Condense stopper arm asm.	1
5	QZ8005	针距调节曲柄	Feed driving asjuster	1
6	QZ8006	倒缝调节组件	Knob asm.	1
7	QZ8007	倒缝调节旋钮	Knob	(1)
8	QZ8008	倒缝调节安装架	Adjusting screw base	(1)
9	QZ8009	倒缝调节螺杆	Adjusting screw	(1)
10	QZ8010	限位块	Stopper	(1)
11	QZ8011	倒缝调节轴套	Shaft	(1)
12	QZ8012	倒缝调节标盘	Stopper dial plate	(1)
13	QZ8013	螺钉	Screw 11/64-40 L=3.5	(2)
14	QZ8014	波型垫圈	Waved washer	(1)
15	QZ8015	螺钉	Screw 11/64-40 L=7	(1)
16	QZ8016	针距调节标盘	Feed dial	1
17	QZ8017	针距调节螺杆	Adjusting screw	1
18	QZ8018	倒缝连杆	Feed reversal link	1
19	QZ8019	限位螺钉	Pin	1
20	QZ8020	倒缝刻度盘	Scale plate	1
21	QZ8021	拉簧销	Spring suspension	1
22	QZ8022	拉簧	Torsion spring	1
23	QZ8023	拉簧销	Tension spring rack B	1
24	QZ8024	限位套	Reverse feed lever stopper	1
25	QZ8025	油封	Oil seal	1
26	QZ8026	止动销	Pin	1
27	QZ8027	止动销弹簧	Spring	1
28	QZ8028	限位套螺钉	Screw 3/16-28 L=18	1
29	QZ8029	弹簧垫圈	Spring washer 5.1x9.2x1.3	1
30	QZ8030	螺钉	Screw 3/16-32 L=6.5	1
31	QZ8031	螺钉	Screw 3/16-28 L=14	1
32	QZ8032	倒缝扳手轴挡圈	Thrust collar asm. D=10.32 W=1	1
33	QZ8033	螺钉	Screw 3/16-28 L=14	1
34	QZ8034	螺钉	Screw 3/16-32 L=6	2
35	QZ8035	螺钉	Screw 3/16-28 L=18	1
36	QZ8036	O型圈	Rubber ring	1
37	QZ8037	轴位螺钉	Hinge screw D=6 H=3.2	1
38	QZ8038	螺母	Nut 3/16-28	1
39	QZ8039	倒缝曲柄	Feed variable arm B	1
40	QZ8040	倒缝曲柄螺钉	Screw 3/16-28 L=15.5	1
41	QZ8041	螺钉	Screw 3/16-28 L=6	2
42	QZ8042	橡皮圈	Rubber plunger	1

9.送布部件

Feed mechanism components

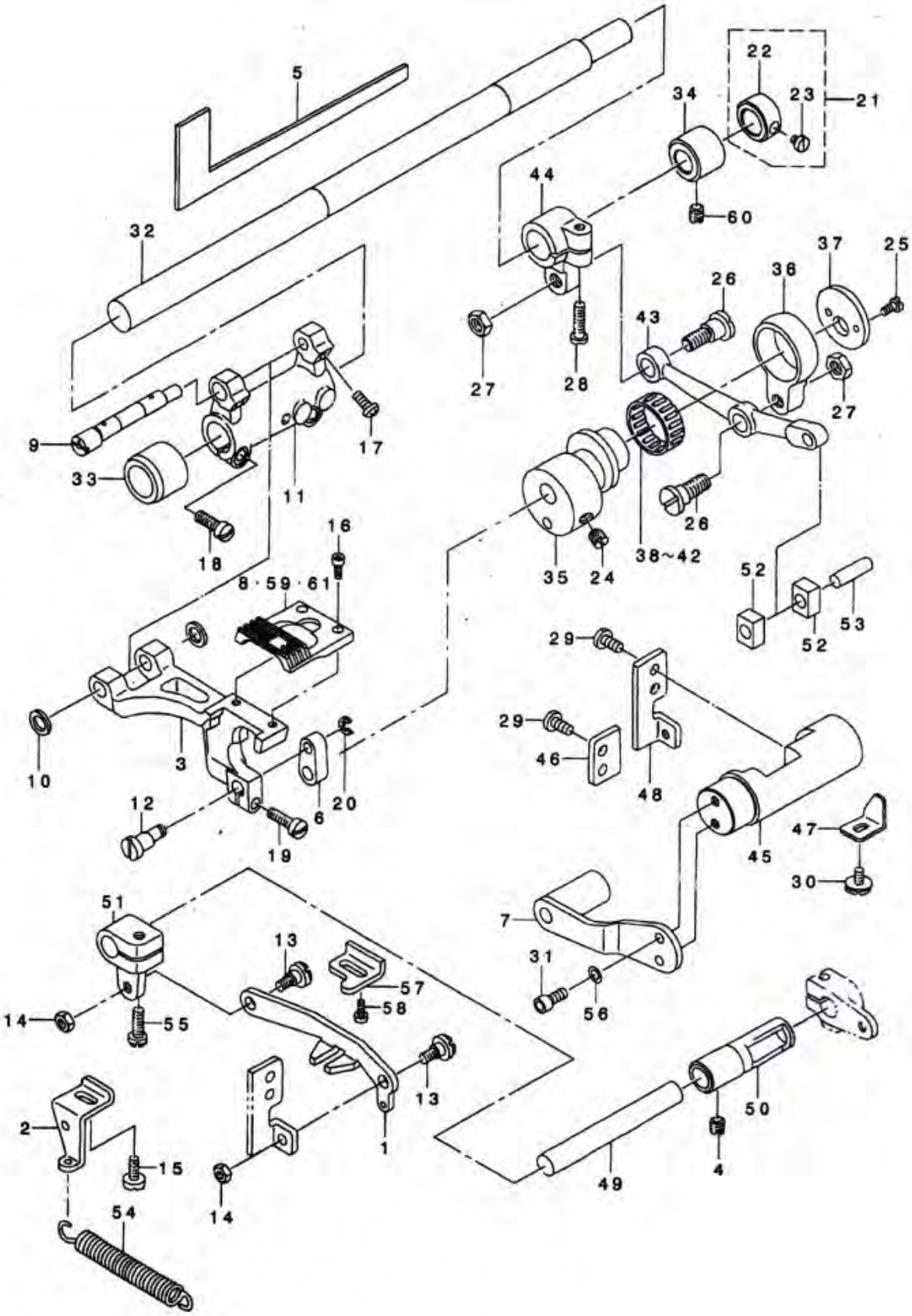

序号	零件代号	名 称	DESCRIPTIPN	数 量
1	QZ9001	送布连杆	Feed reversal link	1
2	QZ9002	拉簧架	Tension spring rack	1
3	QZ9003	牙架	Feed base	1
4	QZ9004	螺钉	Screw 15/64-28 L=4.7	1
5	QZ9005	羊毛毡	Felt	1
6	QZ9006	送布交换曲柄	Link	1
7	QZ9007	平衡块组件	Balance weight compl.	1
8	QZ9008	送布牙	Feed dog	1
9	QZ9009	牙架曲柄轴	Feed base shaft	1
10	QZ9010	垫圈	Spacer	2
11	QZ9011	牙架曲柄	Feed rocker	1
12	QZ9012	抬牙短轴	Link shaft	1
13	QZ9013	轴位螺钉	Hinge screw D=6 H=3.2	2
14	QZ9014	螺母	Nut 3/16-28	2
15	QZ9015	螺钉	Screw 11/64-40 L=11	1
16	QZ9016	送布牙螺钉	Screw 1/8-40 L=7	2
17	QZ9017	牙架曲柄轴螺钉	Screw 3/16-28 L=9	2
18	QZ9018	牙架曲柄螺钉	Screw 3/16-28 L=14	2
19	QZ9019	螺钉	Screw 3/16-28 L=14	1
20	QZ9020	开口挡圈	E-ring 3	1
21	QZ9021	挡圈组件	Thrust collar asm.D=11.11 W=1	1
22	QZ9022	挡圈	Thrust collar D=11.1 W=1	(1)
23	QZ9023	螺钉	Screw 1/4-40 L=7	(1)
24	QZ9024	螺钉	Screw 1/4-40 L=8	2
25	QZ9025	螺钉	Screw 1/8-44 L=6.4	2
26	QZ9026	轴位螺钉	Hinge screw D=9 H=7	2
27	QZ9027	螺母	Nut 9/32-28	2
28	QZ9028	螺钉	Screw 3/16-28 L=15.5	1
29	QZ9029	螺钉	Screw 11/64-40 L=8.5	4
30	QZ9030	螺钉	Screw 11/64-40 L=7	1
31	QZ9031	螺钉	Screw	2
32	QZ9032	送布轴	Feed rocker shaft	1
33	QZ9033	送布轴轴套（左）	"Bushing,front"	1
34	QZ9034	送布轴轴套（右）	"Feed rocker shaft bushing,fro"	1
35	QZ9035	送布凸轮	Eccentric cam	1
36	QZ9036	送布凸轮连杆	Rod	1
37	QZ9037	送布凸轮端盖	Side disc plate	1
38	QZ9038	滚针轴承	Bushing	1
39	QZ9039	滚针轴承	Needle bearing	1
40	QZ9040	滚针轴承	Bearing	1
41	QZ9041	滚针轴承	Bearing	1
42	QZ9042	滚针轴承	Bearing	1
43	QZ9043	送布连杆	Connecting rod	1
44	QZ9044	送布曲柄（右）	Feed rocker shaft crank	1
45	QZ9045	倒缝台	Feed driving rocker	1
46	QZ9046	导向板（左）	Plate A	1
47	QZ9047	倒缝台挡板	Stopper plate	1
48	QZ9048	导向板（右）	Plate B	1
49	QZ9049	抬牙轴	Feed variable shaft	1
50	QZ9050	抬牙轴轴套	Bushing	1
51	QZ9051	抬牙曲柄	Feed variable arm C	1
52	QZ9052	送布连杆滑块	Feed dricing rocker block	2
53	QZ9053	送布连杆滑块轴	Pin	1
54	QZ9054	拉簧	Tension spring	1
55	QZ9055	螺钉	Screw 3/16-28 L=14	1
56	QZ9056	垫圈	Washer	2
57	QZ9057	倒缝限位板	Reverse feed limiter	1
58	QZ9058	倒缝限位板螺钉	Screw 11/64-40 L=11	1
59	QZ9059	送布牙	Feed dog	1
60	QZ9060	螺钉	Screw 15/64-28 L=7	2
61	QZ9061	送布牙	Feed dog	1

10.下轴部件

Hook driving shaft & Hook components

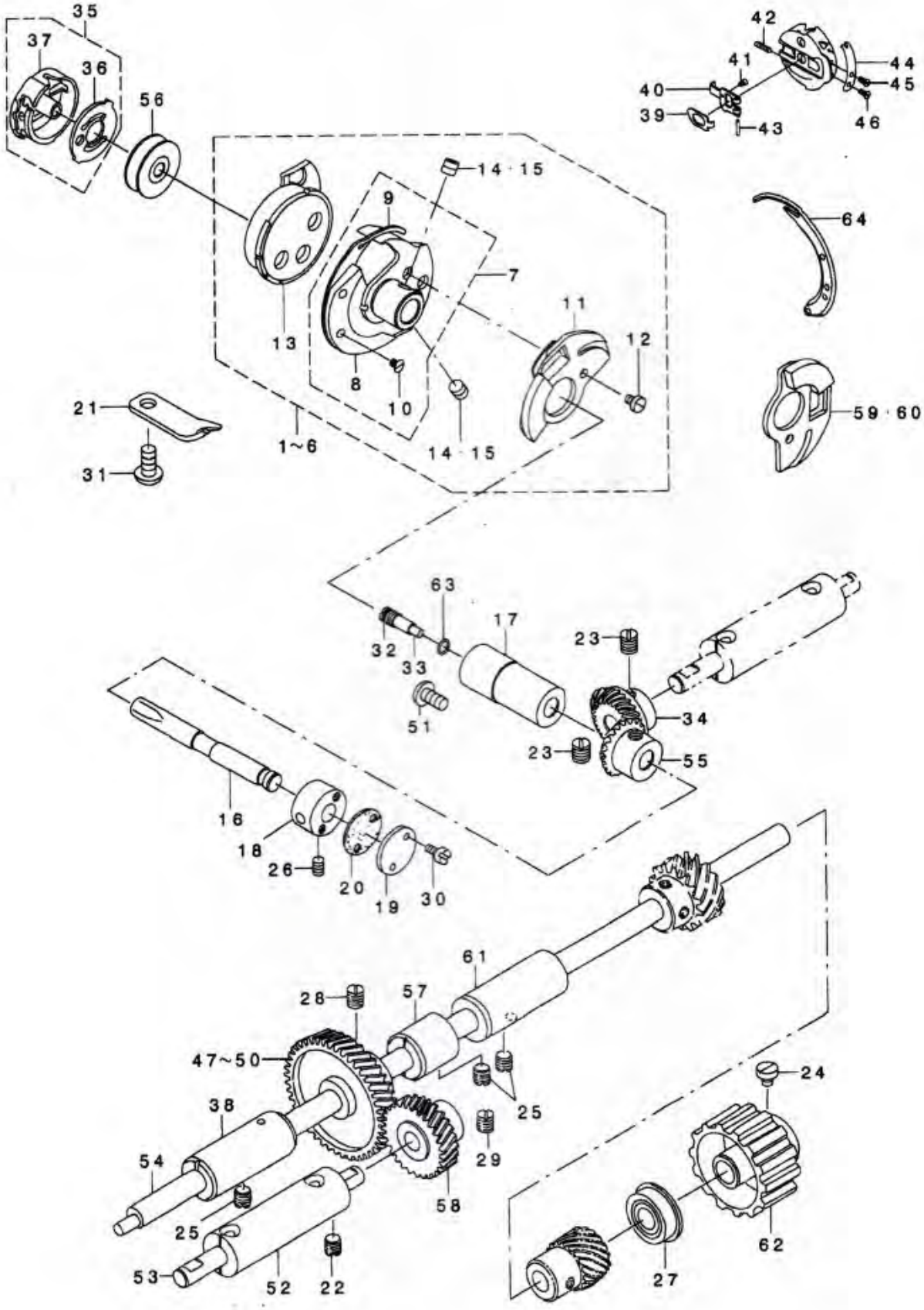

序号	零件代号	名 称	DESCRIPTIPN	数 量
1	QZ10001	旋梭大组件	"Hook compl.,right"	1
2	QZ10002	旋梭大组件	Hook compl.V	1
3	QZ10003	旋梭大组件	Hook compl.V(plastic hook)	1
4	QZ10004	旋梭大组件	Hook compl.V(hard point)	1
5	QZ10005	旋梭大组件	Hook combination(hard point)	1
6	QZ10006	旋梭大组件	Hook asm.(plastic)	1
7	QZ10007	旋梭组件	Rotating hook V asm.	(1)
8	QZ10008	旋梭	Outer hook V	(1)
9	QZ10009	旋梭压板	Inner hook presser v-s	(1)
10	QZ10010	旋梭螺钉	Hook gib screw	(2)
11	QZ10011	旋梭盖板	Reverse plate V	(1)
12	QZ10012	盖板螺钉	Hook counter balance screw	(1)
13	QZ10013	内旋梭	Inner hook V	(1)
14	QZ10014	旋梭螺钉	Screw 11/64-40 L=4	(2)
15	QZ10015	旋梭螺钉	Screw 11/64-40 L=4.5	(2)
16	QZ10016	旋梭轴	Hook shaft	1
17	QZ10017	旋梭轴轴套（长）	Hook shaft bushing	1
18	QZ10018	旋梭轴轴套（短）	Hook shaft bushing	1
19	QZ10019	旋梭轴套盖板	Bushing gap	1
20	QZ10020	旋梭轴套盖板垫片	Gasket	1
21	QZ10021	旋梭定位勾	Inner hook stopper	1
22	QZ10022	螺钉	Screw 15/64-28 L=7	1
23	QZ10023	螺钉	Screw 1/4-40 L=8	4
24	QZ10024	螺钉	Screw 1/4-40 L=7	2
25	QZ10025	螺钉	Screw 15/64-28 L=7	3
26	QZ10026	螺钉	Screw 15/64-28 L=8	1
27	QZ10027	轴承	Bearing D=9.52x22.22	1
28	QZ10028	螺钉	Screw 1/4-40 L=8	2
29	QZ10029	螺钉	Screw 1/4-40 L=8	2
30	QZ10030	螺钉	Screw 1/8-44 L=6	2
31	QZ10031	旋梭定位勾螺钉	Screw 11/64-40 L=9	1
32	QZ10032	油量调节螺钉	Oil seal screw	1
33	QZ10033	油线	Oil wick	1
34	QZ10034	旋梭伞齿轮(大)	Gear asm.large	1
35	QZ10035	梭芯套组件	Bobbin case asm.	1
36	QZ10036	梭芯套弹簧	Bobbin case spring	(1)
37	QZ10037	梭芯套	Bobbin case compl.	(1)
38	QZ10038	下轴轴套（左）	"Bushing,front"	1
39	QZ10039	梭芯套锁扣按钮	Lc-601-1/Latch lever	1
40	QZ10040	按钮座	Lc-602-2/Latch	1
41	QZ10041	螺钉	Sms-801-B/Setscrew pick-up	1
42	QZ10042	弹簧	Lsp-4/Latch spring	1
43	QZ10043	按钮销	Lsp-1/Latch pin	1
44	QZ10044	弹簧片	Tsp-604-B/Tension spring	1
45	QZ10045	螺钉	Sms-608-B/Tension screw	1
46	QZ10046	螺钉	Sms-609-B/Setscrew tension sp	1
47	QZ10047	旋梭齿轮（大）	"Helical gear A,A"	1
48	QZ10048	旋梭齿轮（大）	"Helical gear A,B"	1
49	QZ10049	旋梭齿轮（大）	"Helical gear A,C"	1
50	QZ10050	旋梭齿轮（大）	"Helical gear A,D"	1
51	QZ10051	螺钉	Front screw	1
52	QZ10052	旋梭驱动轴套	Bushing	1
53	QZ10053	旋梭驱动轴	Shaft	1
54	QZ10054	下轴	Hook driving shaft	1
55	QZ10055	旋梭伞齿轮(小)	Pinion asm.	1
56	QZ10056	梭芯	Bobbin S	1
57	QZ10057	下轴轴套（中）	"Bushing,intermediate"	1
58	QZ10058	旋梭伞齿轮(小)	Helical gear B	1
59	QZ10059	反向板	Reverse plate	1
60	QZ10060	反向板	V Reverse plate V	1
61	QZ10061	下轴轴套（右）	"Bushing,rear"	1
62	QZ10062	同步带轮（下）	Hook driving shaft sprocket	1
63	QZ10063	O型圈	Rubber ring	1
64	QZ10064	旋梭保护勾	Inner presser V-S4	1

11.供油部件

Lubrication components

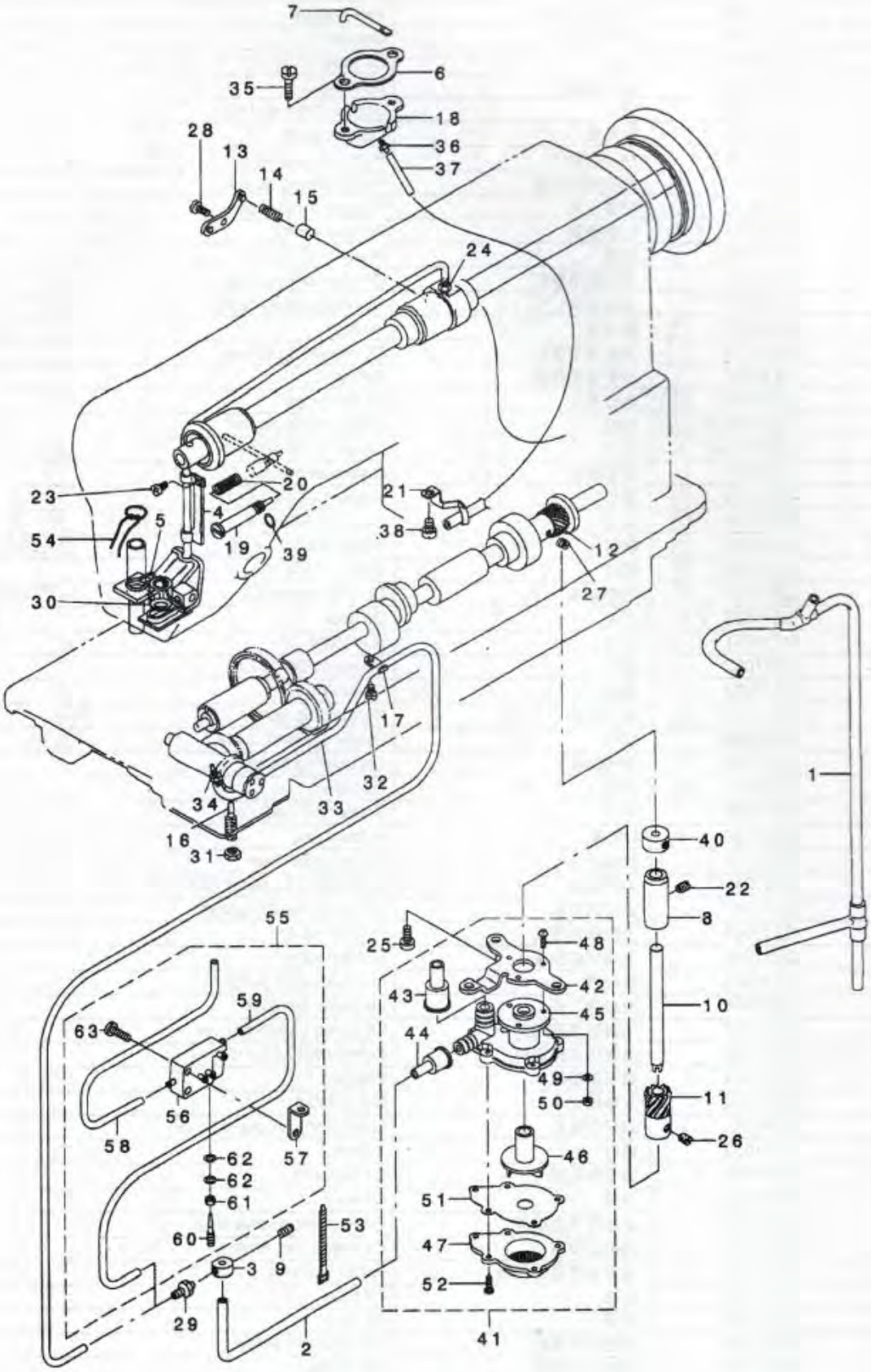

序号	零件代号	名 称	DESCRIPTIPN	数 量
1	QZ11001	供油管组件	Oil supply pipe asm.	1
2	QZ11002	供油管	Oil supply pipe	1
3	QZ11003	接头	Distributor	1
4	QZ11004	羊毛毡组件	Felt asm.	1
5	QZ11005	回油毡弹簧夹	Felt presser	1
6	QZ11006	储油槽垫片	Gasket	1
7	QZ11007	油管	Oil tube	1
8	QZ11008	油泵轴套	Bushing	1
9	QZ11009	螺钉	Screw 11/64-40 L=5	1
10	QZ11010	油泵轴	Upright shaft	1
11	QZ11011	油泵齿轮	Pump driving screw	1
12	QZ11012	油泵驱动齿轮	Pump driving gear A	1
13	QZ11013	柱塞压板	Plunger thrust plate	1
14	QZ11014	柱塞弹簧	Plunger spring	1
15	QZ11015	柱塞	Plunger	1
16	QZ11016	油量调节螺钉	Oil regulating screw	1
17	QZ11017	油管夹头	Oil return tube holder	1
18	QZ11018	储油槽	Oil tank	1
19	QZ11019	油量调节螺钉	Oil regulating screw	1
20	QZ11020	油量调节弹簧	Spring	1
21	QZ11021	油管夹头	Oil felt guide	1
22	QZ11022	螺钉	Screw 15/64-28 L=7	1
23	QZ11023	螺钉	Screw 11/64-40 L=7	1
24	QZ11024	油管接头	Connecting screw	1
25	QZ11025	螺钉	Screw 11/64-40 L=11	2
26	QZ11026	螺钉	Screw 1/4-40 L=4.5	2
27	QZ11027	螺钉	Screw 1/4-40 L=4.5	2
28	QZ11028	螺钉	Screw 11/64-40 L=7	1
29	QZ11029	油管接头	Connecting screw	1
30	QZ11030	油线	Oil wick	0.2
31	QZ11031	螺母	Nut 15/64-28	1
32	QZ11032	螺钉	Screw 11/64-40 L=5	1
33	QZ11033	油管	Oil tube	0.33
34	QZ11034	油管接头	Connecting screw	2
35	QZ11035	螺钉	Screw 11/64-40 L=14	2
36	QZ11036	油管接头	Connecting screw	1
37	QZ11037	油管	Oil tube	0.3
38	QZ11038	螺钉	Screw 11/64-40 L=5	1
39	QZ11039	O型圈	Rubber ring	1
40	QZ11040	挡圈组件	Thrust collar asm.	1
41	QZ11041	油泵组件	Lubricating oil pump asm.	1
42	QZ11042	油泵安装板	Oil pump installing base	(1)
43	QZ11043	上部供油接头	Rubber joint	(1)
44	QZ11044	下部供油接头	Rubber joint	(1)
45	QZ11045	油泵体	Lubricating oil pump	(1)
46	QZ11046	油泵体叶轮	Oil pump impeller	(1)
47	QZ11047	油泵过滤网组件	Oil pump impeller cover	(1)
48	QZ11048	油泵体连接螺钉	Screw m3x0.5 L=10	(3)
49	QZ11049	油泵体垫片	Washer	(3)
50	QZ11050	六角螺母	Nut m3x0.5	(3)
51	QZ11051	油泵体垫片	Lubricating Oil pump cover	(3)
52	QZ11052	螺钉	Screw	(5)
53	QZ11053	油管包扎带	Cable band	1
54	QZ11054	油线	Oil wick	0.2
55	QZ11055	油量调节器组件	Oil regulating valve asm.	1
56	QZ11056	油量调节器	Oil regulating valve	(1)
57	QZ11057	油量调节器安装板	Wiper link joint	(1)
58	QZ11058	油管	Oil tube	(0.18)
59	QZ11059	油管	Oil tube	(0.14)
60	QZ11060	油量调节螺钉	Oil adjusting screw	(1)
61	QZ11061	油量调节螺母	Nut 11/64-40	(1)
62	QZ11062	垫圈	Washer	(2)
63	QZ11063	螺钉	Screw 11/64-40 L=14	(1)

12.线架部件

Thread stand components

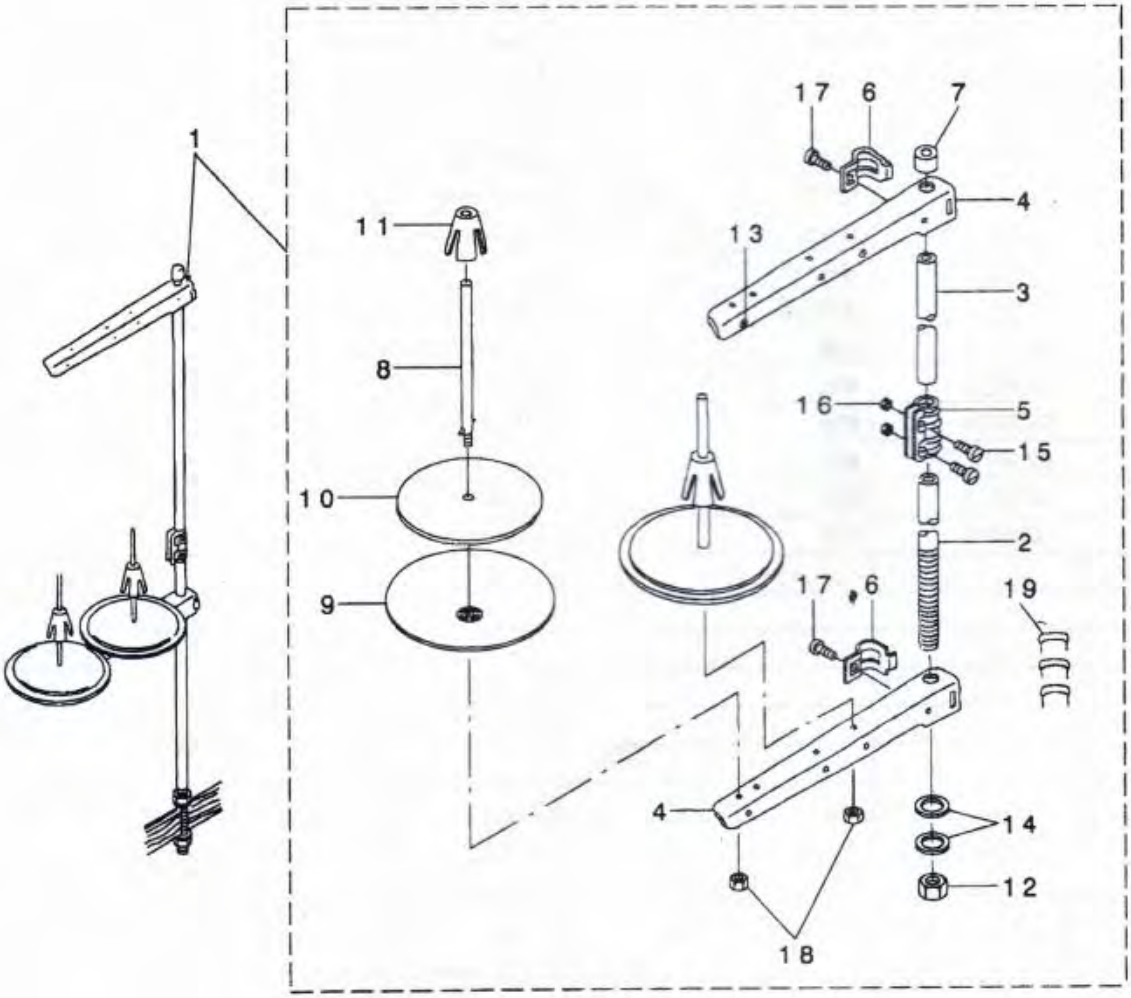

序号	零件代号	名 称	DESCRIPTIPN	数 量
1	QZ16001	线架组件	Thread stand asm.	1
2	QZ16002	线架支撑管（下）	"Spool rest rod,lower"	(1)
3	QZ16003	线架支撑管（上）	"spool rest rod,upper"	(1)
4	QZ16004	过线架	Thread guide arm B	(2)
5	QZ16005	线架接头	Spool rest rod joint	(1)
6	QZ16006	线架固定环	Thread guide arm joint	(2)
7	QZ16007	挡圈	Spool rest rod cap	(1)
8	QZ16008	销	Spool pin	(2)
9	QZ16009	线盘	Spool rest	(2)
10	QZ16010	线盘垫	Spool rest cushion	(2)
11	QZ16011	线盘盖	Spool retainer	(2)
12	QZ16012	螺母	Nut	(1)
13	QZ16013	过线孔套	Thread guide	(2)
14	QZ16014	垫圈	Washer 16x30x2.6	(2)
15	QZ16015	螺钉	Screw M5 L=14	(2)
16	QZ16016	螺母	Nut M5	(2)
17	QZ16017	螺钉	Screw M6 L=16	(2)
18	QZ16018	螺母	Nut M5	(2)
19	QZ16019	钉子	Cord staple	(3)

13.皮带罩部件

Belt cover components

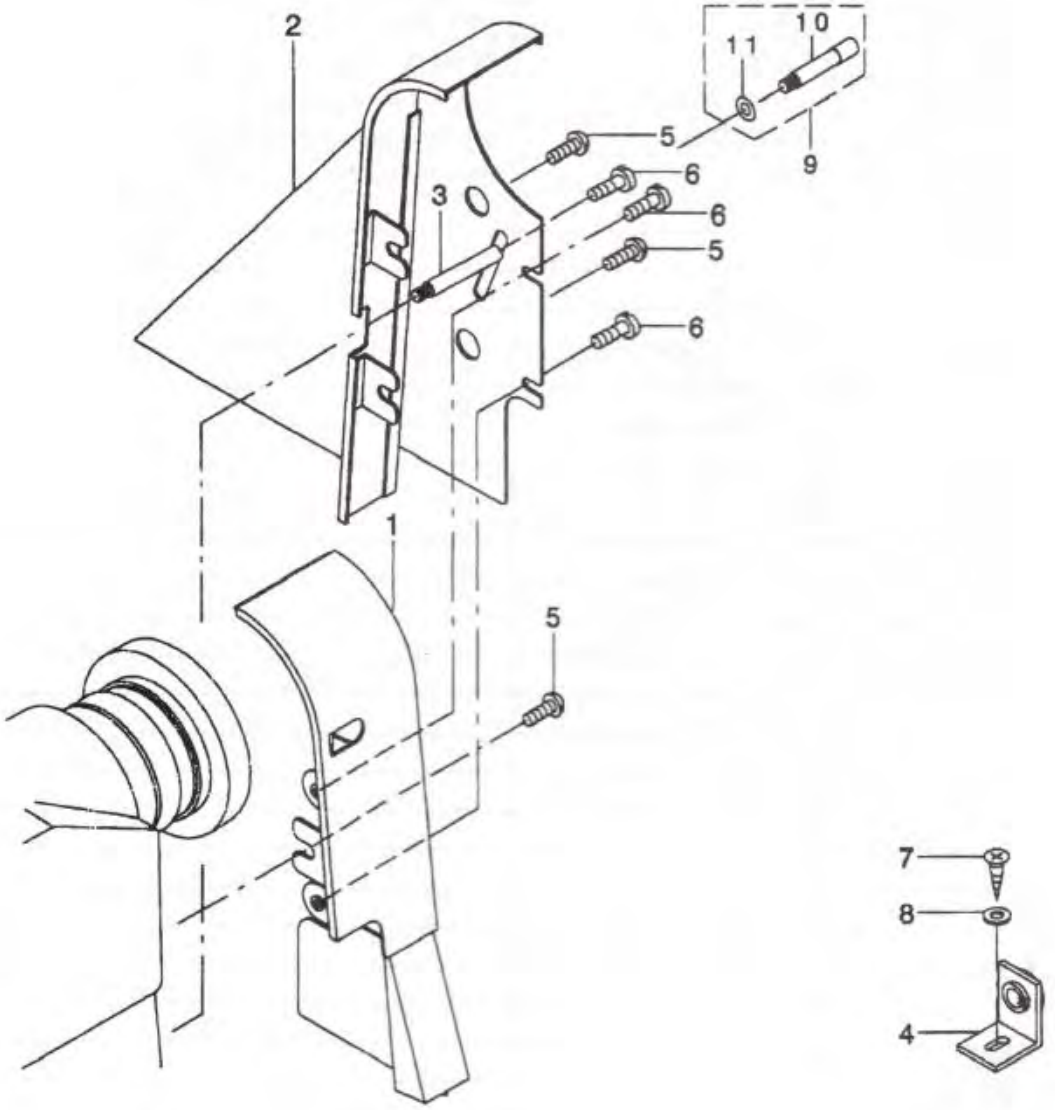

序号	零件代号	名 称	DESCRIPTIPN	数 量
1	QZ18001	皮带罩（A）	Belt cover A	1
2	QZ18002	皮带罩（B）	Belt cover B	1
3	QZ18003	皮带罩支撑螺钉	Belt cover support stud	1
4	QZ18004	固定架	Belt cover press plate	1
5	QZ18005	螺钉	Screw 15/64-28 L=9	3
6	QZ18006	螺钉	Screw 11/64-40 L=4.3	3
7	QZ18007	木螺钉	Wood screw D=4.8 L=25	1
8	QZ18008	垫圈	Washer 5x10.5x1	1
9	QZ18009	检测器安装轴组件	Synchronizer support asm.	1
10	QZ18010	检测器安装轴	Synchronizer support asm.	(1)
11	QZ18011	垫圈	Washer 4.5x10x0.8	(1)

14.油盘部件

Oil reservoir & Knee lifter components

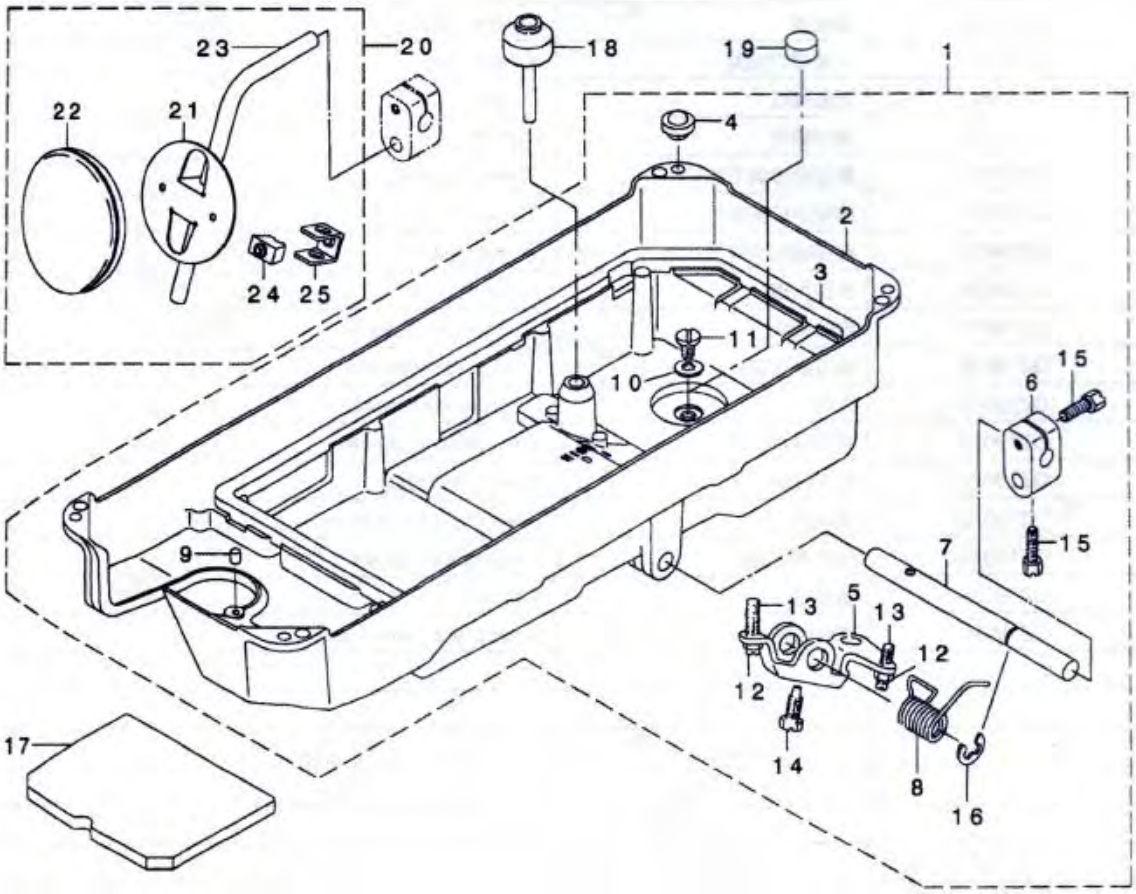

序号	零件代号	名 称	DESCRIPTIPN	数 量
1	QZ19001	油盘组件	Oil reservoir asm.	1
2	QZ19002	油盘	Oil reservoir	(1)
3	QZ19003	油盘垫	Oil reservoir gasket	(1)
4	QZ19004	橡胶垫	Rubber cushion	(4)
5	QZ19005	膝控限位架	"Connecting rot,vertical"	(1)
6	QZ19006	碰块弯杆接头	Bracket	(1)
7	QZ19007	膝控铰链轴	Knee press rod	(1)
8	QZ19008	膝控复位弹簧	Spring	(1)
9	QZ19009	橡胶塞	Rubber plug	(1)
10	QZ19010	放油螺钉垫圈	Rubber plug	(1)
11	QZ19011	放油螺钉	Screw	(1)
12	QZ19012	调节螺母	Nut M6	(2)
13	QZ19013	膝控限位调节螺钉	Screw M6 L=30	(2)
14	QZ19014	膝控限位架螺钉	Screw M6 L=17.5	(1)
15	QZ19015	膝控碰块弯杆接头螺钉	Screw M6 L=20	(2)
16	QZ19016	开口挡圈	E-ring 10	(1)
17	QZ19017	定位量块	Oil revervoir base	1
18	QZ19018	膝控提升顶杆	Knee press lifter rod	1
19	QZ19019	磁块	Oil reservoir magnet	1
20	QZ19020	膝控碰块组件	Knee press plate asm.	1
21	QZ19021	膝控碰块	Knee press plate	(1)
22	QZ19022	碰块垫	Knee press plate cover	(1)
23	QZ19023	膝控碰块弯杆	Knee lifter plate rod	(1)
24	QZ19024	碰块架	Rubber	(1)
25	QZ19025	碰块架螺钉	Knee press plate holder	(1)

15.2286N专用零件
Exclusive parts for 2286N

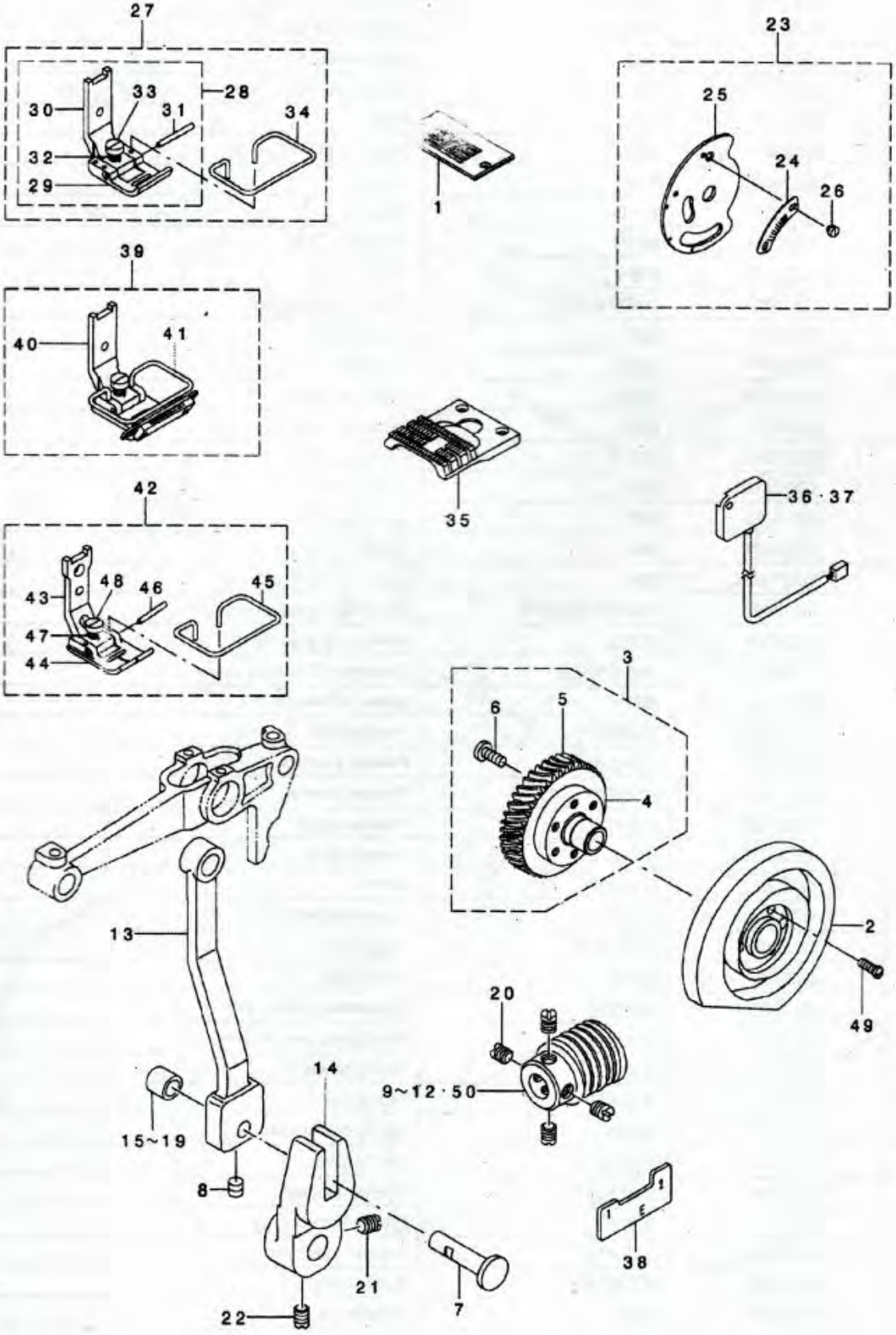

序号	零件代号	名 称	DESCRIPTIPN	数 量
1	QZ20001	针板	Needle plate	
2	QZ20002	凸轮	Needle vibrating cam A	
3	QZ20003	蜗轮组件	Worm wheel compl.	
4	QZ20004	蜗轮芯轴	Worm wheel hub	
5	QZ20005	蜗轮	Worm wheel	
6	QZ20006	蜗轮螺钉	Screw 11/64-40 L=10.5	
7	QZ20007	轴销	Shaft	
8	QZ20008	螺钉	Screw 11/64-40 L=4	
9	QZ20009	蜗杆A	Worm A	
10	QZ20010	蜗杆B	Worm B	
11	QZ20011	蜗杆C	Worm C	
12	QZ20012	蜗杆D	Worm D	
13	QZ20013	针杆摆动连杆	Needle vibrating rod	
14	QZ20014	曲柄	Rod guide	
15	QZ20015	滚柱A	Feed cam roller	
16	QZ20016	滚柱B	Feed cam roller	
17	QZ20017	滚柱C	Feed cam roller	
18	QZ20018	滚柱D	Feed cam roller	
19	QZ20019	滚柱E	Feed cam roller	
20	QZ20020	螺钉	Screw 1/4-40 L=6	
21	QZ20021	螺钉	Screw 1/4-40 L=8	
22	QZ20022	螺钉	Screw 1/4-40 L=8.5	
23	QZ20023	针幅调节标盘组件	Swing wide graduation asm.	
24	QZ20024	刻度盘	Swing wide graduation	
25	QZ20025	针幅调节标盘	Scale mounting base compl.	
26	QZ20026	螺钉	Screw 1/8-44 L=2.5	
27	QZ20027	压脚大组件	Presser asm.	
28	QZ20028	压脚组件	Presser a asm.	
29	QZ20029	压脚底板	Presser lower A	
30	QZ20030	压脚柄	Presser upper	
31	QZ20031	压脚销	Presser pin A	
32	QZ20032	压脚弹簧	Spring	
33	QZ20033	压脚螺钉	Screw 9/64-40 L=7.5	
34	QZ20034	压脚防护罩	Safety cover	
35	QZ20035	送布牙	Feed dog	
36	QZ20036	电线组件	Resistance pack al asm.	
37	QZ20037	电线组件	Resistance pack af asm.	
38	QZ20038	定位块	Timing gauge E	
39	QZ20039	压脚大组件	Taping foot	
40	QZ20040	压脚柄	Taping presser asm.	
41	QZ20041	压脚防护罩	Safety cover	
42	QZ20042	压脚大组件	Presser foot asm.	
43	QZ20043	压脚柄	Presser foot(upper)	
44	QZ20044	压脚底板	Presser foot(lower)	
45	QZ20045	压脚防护罩	Safety cover	
46	QZ20046	压脚销	Presser pin	
47	QZ20047	压脚弹簧	Spring	
48	QZ20048	压脚螺钉	Screw 9/64-40 L=7.5	
49	QZ20049	压脚螺钉	Screw 11/64-40 L=14	

16.2288N专用零件 (1)

Exclusive parts for 2288N(1)

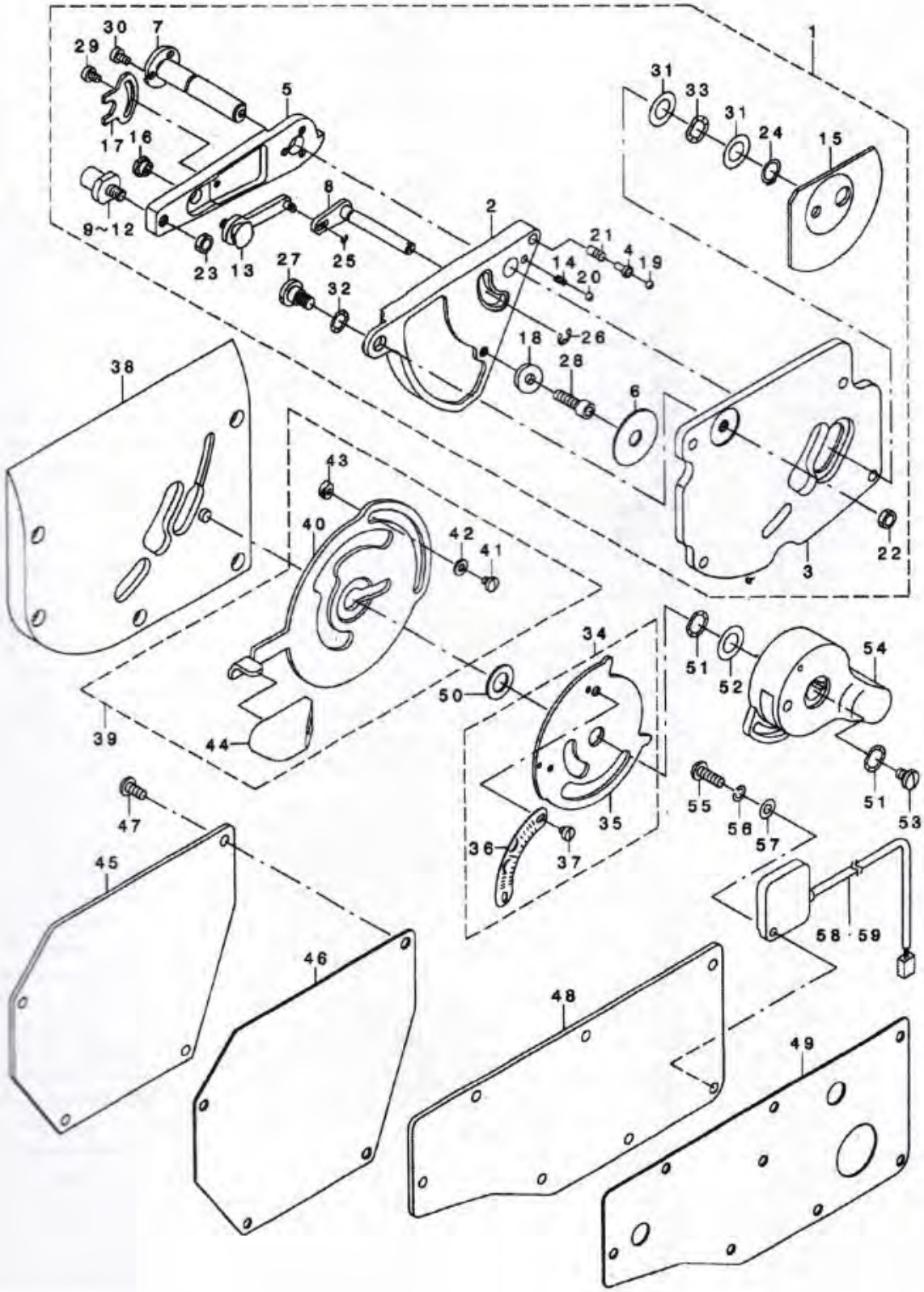

序号	零件代号	名 称	DESCRIPTIPN	数 量
1	QZ24001	针位置调节组件	Position change base asm.	1
2	QZ24002	针位置调节座	Needle position change base	(1)
3	QZ24003	安装板	Fitting plate	(1)
4	QZ24004	调节销	Chaning stopper	(1)
5	QZ24005	调整曲柄	Adjusting arm	(1)
6	QZ24006	垫片	Packing	(1)
7	QZ24007	轴	Shaft	(1)
8	QZ24008	曲柄轴组件	Lever asm.	(1)
9	QZ24009	轴位螺钉A	Shaft	(1)
10	QZ24010	轴位螺钉B	Shaft	(1)
11	QZ24011	轴位螺钉C	Shaft	(1)
12	QZ24012	轴位螺钉D	Shaft	(1)
13	QZ24013	限位块组件	Stopper asm.	(1)
14	QZ24014	弹簧	Spring	(1)
15	QZ24015	防油板	Oil shield	(1)
16	QZ24016	螺母	Nut	(1)
17	QZ24017	限位块	Nut stopper	(1)
18	QZ24018	滚柱	Roller	(1)
19	QZ24019	钢球	Hand stop crank shaft ball	(1)
20	QZ24020	钢球	Hand stop crank shaft ball	(1)
21	QZ24021	弹簧	Spring	(1)
22	QZ24022	螺母	Nut 15/64-28	(1)
23	QZ24023	螺母	Nut 15/64-28	(1)
24	QZ24024	挡圈	Snap ring M10	(1)
25	QZ24025	开口挡圈	E-ring	(1)
26	QZ24026	开口挡圈	E-ring 4	(1)
27	QZ24027	轴位螺钉	Hinge scew D=8 H=4	(1)
28	QZ24028	螺钉	Screw M5x0.8 L=16	(1)
29	QZ24029	螺钉	Screw 9/64-40 L=5.0	(1)
30	QZ24030	螺钉	Screw 9/64-40 L=6	(3)
31	QZ24031	垫圈	Washer	(2)
32	QZ24032	波型垫圈	Waved washer 8.5x12.5x0.3	(3)
33	QZ24033	波型垫圈	Waved washer	(1)
34	QZ24034	针幅调节板组件	Scale mounting asm.	1
35	QZ24035	针幅调节板	Scale position change lever	(1)
36	QZ24036	刻度盘	Scale	(1)
37	QZ24037	螺钉	Screw 1/8-44 L=2.5	(2)
38	QZ24038	右侧盖板	Side cober asm.	1
39	QZ24039	调节连杆组件	Changing lever asm.	1
40	QZ24040	调节连杆	Needle position change lever	(1)
41	QZ24041	螺钉	Screw 9/64-40 L=3.5	(2)
42	QZ24042	垫圈	Washer 3.7x8x1	(2)
43	QZ24043	螺母	Lever stopper	(2)
44	QZ24044	手柄	Knob	(1)
45	QZ24045	凸轮盖板	Cam cover	1
46	QZ24046	垫片	Cam cover packing	1
47	QZ24047	螺钉	Screw 3/16-28 L=10	4
48	QZ24048	盖板	Window plate	1
49	QZ24049	垫片	Window plate packing	1
50	QZ24050	垫圈	Washer	1
51	QZ24051	波型垫圈	Waved washer	2
52	QZ24052	垫圈	Washer	1
53	QZ24053	螺钉	Screw 3/16-32 L=6.5	1
54	QZ24054	手柄	Knob	1
55	QZ24055	螺钉	Screw 3/16-28 L=14	1
56	QZ24056	弹簧垫圈	Spring washer 5.1x9.2x1.3	1
57	QZ24057	垫圈	Washer 5x10.5x1	1
58	QZ24058	电线组件	Resistance pack al asm.	1
59	QZ24059	电线组件	Resistance pack al asm.	1

17.2288N专用零件 (2)

Exclusive parts for 2288N(2)

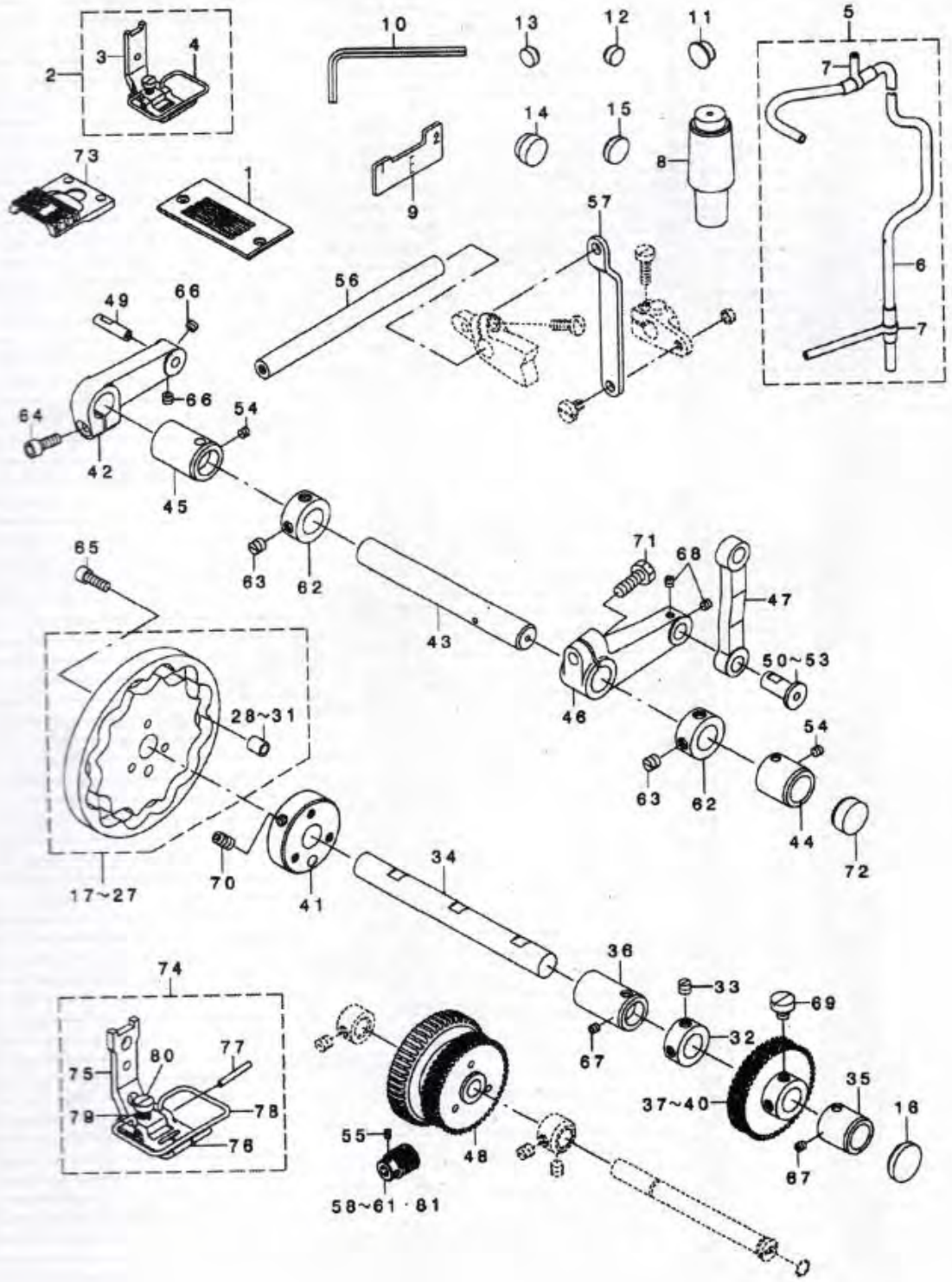

序号	零件代号	名 称	DESCRIPTIPN	数 量
1	QZ25001	针板	Needle plate	1
2	QZ25002	压脚组件	Presser asm.	1
3	QZ25003	压脚柄	Presser foot asm.	(1)
4	QZ25004	压脚防护罩	Safety cover	(1)
5	QZ25005	油管组件	Arm shaft oil pipe asm.	1
6	QZ25006	油管	Arm shaft oil pipe	(1)
7	QZ25007	油管接头	Rubber joint	(2)
8	QZ25008	机头支撑杆	Head support rod asm.	1
9	QZ25009	定位块	Timing gauge e	1
10	QZ25010	内六角扳手	Socket screw keys	1
11	QZ25011	橡皮塞	Rubber plug	1
12	QZ25012	橡皮塞	Rubber plug	3
13	QZ25013	橡皮塞	Rubber plug	2
14	QZ25014	橡皮塞	Plug	2
15	QZ25015	橡皮塞	Rubber plug D=17.5 L=5	1
16	QZ25016	橡皮塞	Rubber plug	1
17	QZ25017	凸轮组件	Needle driving cam a asm.	1
18	QZ25018	凸轮组件	Needle driving cam b asm.	1
19	QZ25019	凸轮组件	Needle vibrating cam asm .c	1
20	QZ25020	凸轮组件	Needle driving cam d asm.	1
21	QZ25021	凸轮组件	Needle driving cam e asm.	1
22	QZ25022	凸轮组件	Needle vibrating cam asm .f	1
23	QZ25023	凸轮组件	Needle vibrating cam asm .g	1
24	QZ25024	凸轮组件	Needle vibrating cam asm .h	1
25	QZ25025	凸轮组件	Needle vibrating cam asm .j	1
26	QZ25026	凸轮组件	Needle vibrating cam asm .k	1
27	QZ25027	凸轮组件	Needle vibrating cam asm .l	1
28	QZ25028	滚柱A	"Cam roller,a"	(1)
29	QZ25029	滚柱B	"Cam roller,b"	(1)
30	QZ25030	滚柱C	"Cam roller,c"	(1)
31	QZ25031	滚柱D	"Cam roller,d"	(1)
32	QZ25032	挡圈	Thrust collar D=14 W=10.5	1
33	QZ25033	螺钉	Screw 1/4-40 L=7	2
34	QZ25034	凸轮轴	Cam shaft	1
35	QZ25035	轴套A	"Bushing,a"	1
36	QZ25036	轴套B	"Bushing,b"	1
37	QZ25037	齿轮A	Cam shaft gear a	1
38	QZ25038	齿轮B	Cam shaft gear b	1
39	QZ25039	齿轮C	Cam shaft gear b	1
40	QZ25040	齿轮D	Cam shaft gear d	1
41	QZ25041	挡圈	Cam folder asm.	1
42	QZ25042	曲柄	Cam arm	1
43	QZ25043	曲柄轴	Driving shaft	1
44	QZ25044	轴套A	Driving shaft metal a	1
45	QZ25045	轴套B	"Bushing ,b"	1
46	QZ25046	驱动曲柄	Driving arm	1
47	QZ25047	驱动连杆	Driving rod	1
48	QZ25048	蜗轮组件	Worm wheel compl.	1
49	QZ25049	小轴	Cam roller shaft	1
50	QZ25050	驱动销A	"Driving pin ,a"	1
51	QZ25051	驱动销B	"Driving pin ,b"	1
52	QZ25052	驱动销C	"Driving pin ,c"	1
53	QZ25053	驱动销D	"Driving pin ,d"	1
54	QZ25054	螺钉	Screw 11/64-40 L=4	2
55	QZ25055	螺钉	Screw 1/4-40 L=6	4
56	QZ25056	连杆轴	Feed lever shaft	1
57	QZ25057	连杆	"Feed changing link,a"	1
58	QZ25058	蜗杆A	Worm asm.a	1
59	QZ25059	蜗杆B	Worm b	1
60	QZ25060	蜗杆C	Worm	1
61	QZ25061	蜗杆D	Worm	1
62	QZ25062	挡圈	Thrust collar D=14 W=10.5	2
63	QZ25063	螺钉	Screw 1/4-40 L=6	(4)
64	QZ25064	螺钉	Screw m5x1.8 L=14	1
65	QZ25065	螺钉	Screw m5x1.8 L=14	3
66	QZ25066	螺钉	Screw m5x6	2
67	QZ25067	螺钉	Screw 11/64-40 L=4	2
68	QZ25068	螺钉	Screw 11/64-40 L=4	2
69	QZ25069	螺钉	Screw 1/4-40 L=7	2
70	QZ25070	螺钉	Screw	2
71	QZ25071	螺钉	Screw 15/64-28 L=17	1
72	QZ25072	橡皮塞	Plug	1
73	QZ25073	送布牙	Feed dog	1
74	QZ25074	压脚组件	Presser foot asm.	1
75	QZ25075	压脚柄	Presser foot (upper)	(1)
76	QZ25076	压脚底板	Presser foot (lover)	(1)
77	QZ25077	压脚销	Presser pin	(1)
78	QZ25078	压脚防护罩	Safety cover	(1)
79	QZ25079	压脚弹簧	Spring	(1)
80	QZ25080	螺钉	Screw 9/64-40 L=7.5	(1)
81	QZ25081	蜗杆E	Worm E	1

18. 2284N(-7),2284C-7专用零件(1)

Exclusive parts for 2284N(-7),2284C(-7)(1)

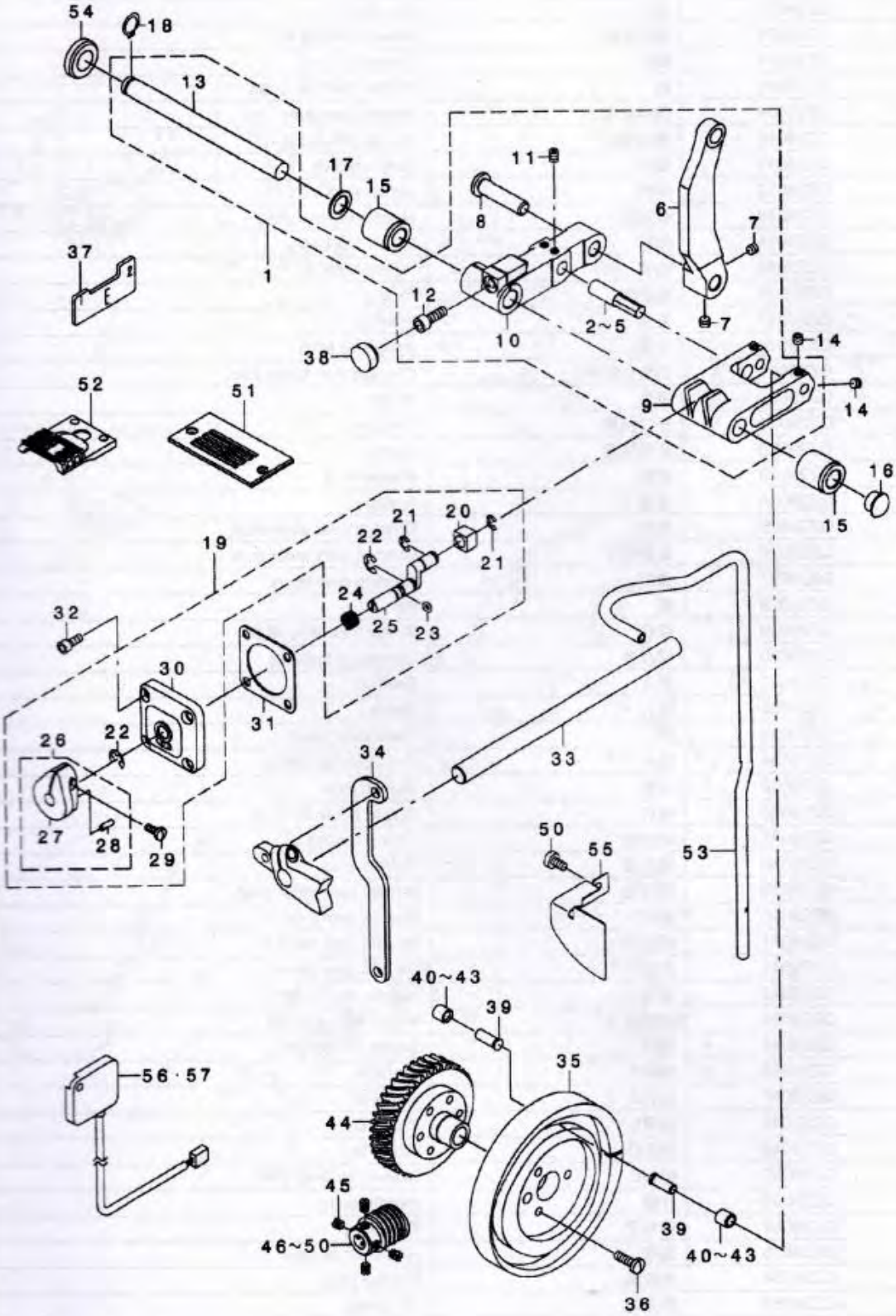

序号	零件代号	名 称	DESCRIPTIPN	数 量
1	QZ29001	针杆驱动曲柄组件	Needle driving arm asm.	1
2	QZ29002	销A	Dia pin a	(1)
3	QZ29003	销B	Dia pin b	(1)
4	QZ29004	销C	Dia pin c	(1)
5	QZ29005	销D	Dia pin d	(1)
6	QZ29006	驱动曲柄	Needle driving rod	(1)
7	QZ29007	螺钉	Screw M5 L=4	(2)
8	QZ29008	销	Thread trimmer shaft	(1)
9	QZ29009	连接曲柄	Needle cam arm	(1)
10	QZ29010	驱动连杆	Needle driving arm	(1)
11	QZ29011	螺钉	Screw M5X6	(2)
12	QZ29012	螺钉	Screw M5X0.8 L=14	(1)
13	QZ29013	驱动轴	Needle driving shaft	(1)
14	QZ29014	螺钉	Screw M5 L=4	4
15	QZ29015	轴套（前）	"Metal,front"	2
16	QZ29016	橡皮塞	Plug	1
17	QZ29017	垫圈	Washer	1
18	QZ29018	挡圈	Snap ring M10	1
19	QZ29019	切换台组件	Change over basis asm.	1
20	QZ29020	滑块	Roller	(1)
21	QZ29021	开口挡圈	E-ring 4	(2)
22	QZ29022	开口挡圈	E-ring	(2)
23	QZ29023	垫圈	Rubber ring	(1)
24	QZ29024	弹簧	Spring	(1)
25	QZ29025	曲轴	Change over slide shaft	(1)
26	QZ29026	曲柄组件	Change over lever asm.	(1)
27	QZ29027	曲柄	Change over lever	(1)
28	QZ29028	销	Pin	(1)
29	QZ29029	螺钉	Screw 9/64-40 L=8.5	(1)
30	QZ29030	切换台	Change over basis	(1)
31	QZ29031	垫片	Gasket	1
32	QZ29032	螺钉	Screw	4
33	QZ29033	轴	Feed lever shaft	1
34	QZ29034	连杆	Feed change link a	1
35	QZ29035	凸轮	Needle cam	1
36	QZ29036	螺钉	Screw 11/64-40 L=14	3
37	QZ29037	定位块	Timing Gauge e	1
38	QZ29038	橡皮塞	Rubber plug	1
39	QZ29039	滚柱轴	Needle cam roller shaft	2
40	QZ29040	滚柱A	Needle cam roller A	2
41	QZ29041	滚柱B	Needle cam roller B	2
42	QZ29042	滚柱C	Needle cam roller C	2
43	QZ29043	滚柱D	Needle cam roller D	2
44	QZ29044	蜗轮组件	Worm wheel compl.	1
45	QZ29045	带轮	Screw 1/4-40 L=6	4
46	QZ29046	蜗杆A	Worm A	1
47	QZ29047	蜗杆B	Worm B	1
48	QZ29048	蜗杆C	Worm C	1
49	QZ29049	蜗杆D	Worm D	1
50	QZ29050	蜗杆E	Screw 11/64-40 L=8	1
51	QZ29051	针板	Needle plate	1
52	QZ29052	送布牙	Feed dog	1
53	QZ29053	油管	Arm shaft oil pipe	1
54	QZ29054	橡皮圈	Rubber plug	1
55	QZ29055	防油板	Oil shield	1
56	QZ29056	电线组件	Resistance pack al asm.	1
57	QZ29057	电线组件	Resistance pack al asm.	1

19.2284N(-7),2284C-7专用零件(2)

Exclusive parts for 2284N(-7),2284C(-7)(2)

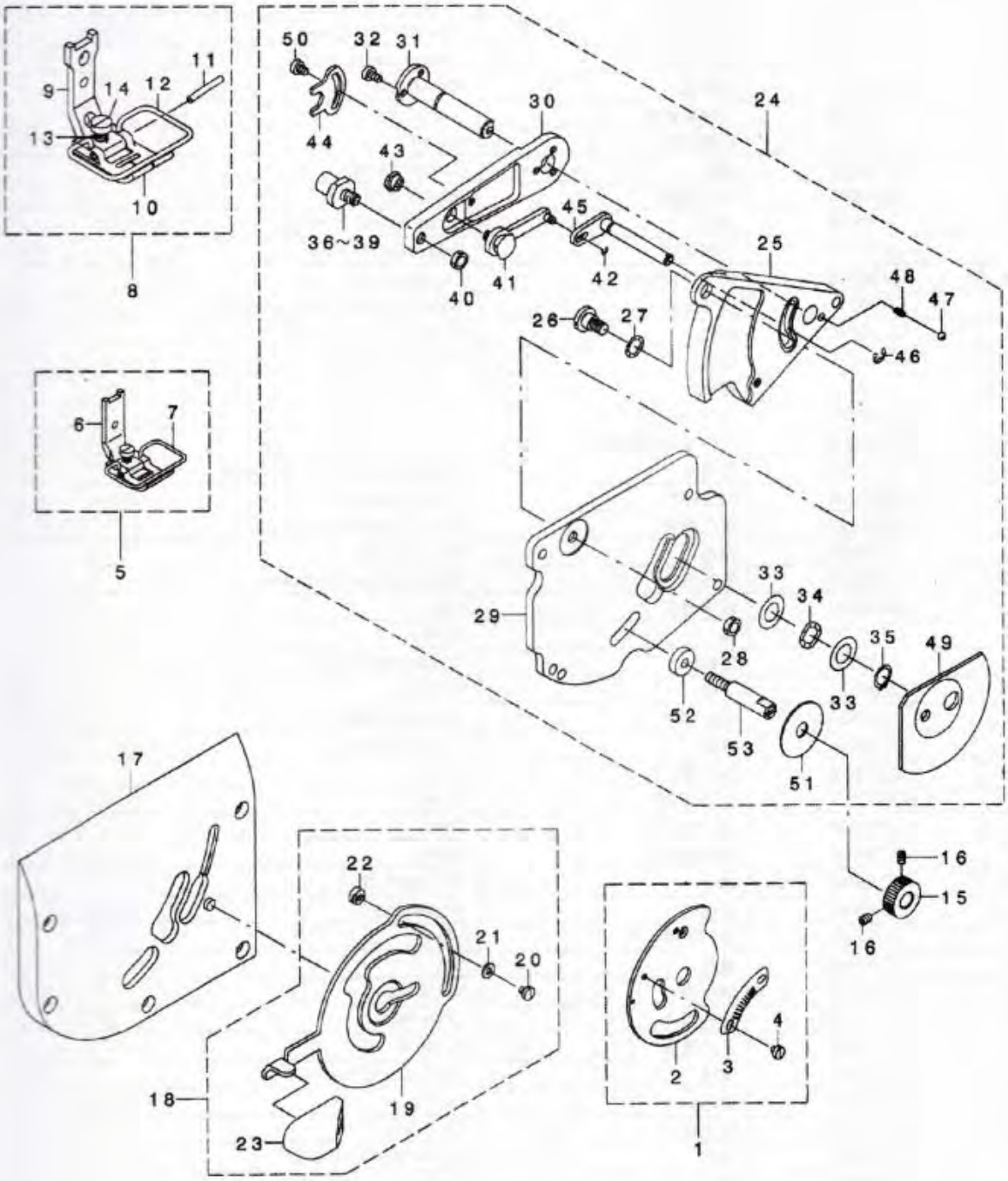

序号	零件代号	名 称	DESCRIPTIPN	数 量
1	QZ30001	针幅调节板组件	Swing wide graduation asm.	1
2	QZ30002	针幅调节板	Fitting plate compl	(1)
3	QZ30003	刻度盘	Swing wide graduation	(1)
4	QZ30004	螺钉	Screw 1/8-44 L=2.5	(2)
5	QZ30005	压脚组件	Presser asm.	1
6	QZ30006	压脚柄	Presser foot asm.	(1)
7	QZ30007	压脚防护罩	Safety cover	(1)
8	QZ30008	压脚组件	Presser foot asm.	1
9	QZ30009	压脚柄	Presser foot (upper)	(1)
10	QZ30010	压脚底板	Presser foot(lower)	(1)
11	QZ30011	压脚销	Presser pin	(1)
12	QZ30012	压脚防护罩	Safety cover	(1)
13	QZ30013	压脚弹簧	Spring	(1)
14	QZ30014	螺钉	Screw9/64-40 L=7.5	(1)
15	QZ30015	调节旋钮	Adjusting pick-up	1
16	QZ30016	螺钉	Screw M4X0.7 L=0.5	2
17	QZ30017	右侧盖板	Side cover asm.	1
18	QZ30018	调节曲柄组件	Changing lever asm.	1
19	QZ30019	调节曲柄	Needle position change lever	(1)
20	QZ30020	螺钉	Screw 9/64-40 L=3.5	(2)
21	QZ30021	垫圈	Washer 3.7x8x1	(2)
22	QZ30022	螺母	Lever stopper	(2)
23	QZ30023	手柄	Knob	(1)
24	QZ30024	针位置调节板组件	Change base asm.	1
25	QZ30025	安装座	Needle position change base	(1)
26	QZ30026	轴位螺钉	Hinge screw D=8 H=4	(1)
27	QZ30027	波型垫圈	Waved washer 8.5x12.5x0.3	(3)
28	QZ30028	螺母	Nut 15/64-28	(1)
29	QZ30029	安装板	Change base fitting plate	(1)
30	QZ30030	调节曲柄	arm	(1)
31	QZ30031	轴	Shaft	(1)
32	QZ30032	螺钉	Screw 9/64-40 L=6	(3)
33	QZ30033	垫圈	Washer	(2)
34	QZ30034	波型垫圈	Waved washer	(1)
35	QZ30035	挡圈	Snap ring M10	(1)
36	QZ30036	轴位螺钉A	Shaft	(1)
37	QZ30037	轴位螺钉B	Shaft	(1)
38	QZ30038	轴位螺钉C	Shaft	(1)
39	QZ30039	轴位螺钉D	Shaft	(1)
40	QZ30040	螺母	Nut 15/64-28	(1)
41	QZ30041	限位块	Stopper asm.	(1)
42	QZ30042	开口挡圈	E-ring	1)
43	QZ30043	螺母	Nut	(1)
44	QZ30044	限位块	Nut stopper	(1)
45	QZ30045	连杆组件	Lever asm.	(1)
46	QZ30046	开口挡圈	E-ring 4	(1)
47	QZ30047	钢球	Hand stop crank shaft ball	(1)
48	QZ30048	弹簧	Spring	(1)
49	QZ30049	防油板	Oil shield	(1)
50	QZ30050	螺钉	Screw 9/64-40 L=5.0	(1)
51	QZ30051	垫片	Packing	(1)
52	QZ30052	滚柱	Roller	(1)
53	QZ30053	调节螺钉	Adjusting pick-up screw	(1)

杰克缝纫机

全球销量遥遥领先

Leading in global sales

400-8876-858

www.chinajack.com

台州市布鲁斯缝制设备有限公司 .TD.
中国浙江省台州市椒江区三甲东海大道东段1008号
电话: 4008890100

TaiZhou Bruce Sewing Machine Co.,Ltd.
NO.1008 , DONGHAI AVENUE EAST, JIAOJIANG
DISTRICT,TAIZHOU CITY , ZHEJIANG
TEL: 4008890100

2019年1月Edition: June,2019

杰克缝纫机股份有限公司

中国浙江省台州市椒江区三甲东海大道东段1008号
电 话 :0086-576-88177788 88177789
传 真 :0086-576-88177758

产品标准代号：Q/TK 007-2017
资料如有更改，恕不另行通知，以实样为准

JACK SEWING MACHINE CO.,LTD.

No. 1008,DONGHAI AVENUE EAST,JIAOJAING DISTRICT,TAIZHOU CITY,ZHEJIANG
TEL: 0086-576-88177782 88177767 E-mail: sales@chinajack.com
FAX: 0086-576-88177787 www.chinajack.com

Standard code of the products:Q/TK 007-2017
You will be not informed if the file has been revised. Please set sample as standard